Diagnostic Functional Description of

SGM GP50 ABS9

ABS9

Communication protocol: GMLAN on CAN

© This document is the exclusive property of Robert Bosch GmbH. Without their consent it may not be reproduced or given to third parties.
If printed this is a uncontrolled document. The user must verify it is an authorized edition prior to use.

Table of contents

1 EXPLANATIONS 4

1.1 ABBREVIATION 4
1.2 VAF NAMES (GM/BOSCH) 4

2. SHORT DESCRIPTION OF DIAGNOSTIC COMMUNICATION 5

3 CONTEXT INFORMATION 6

3.1 OPERATIONAL ENVIRONMENT 6
3.2 USE CASES 6
3.3 REFERENCED DOCUMENTS 6
3.3.1 International Documents *6*
3.3.2 Customer Documents *7*

4 REQUIREMENTS 8

4.1.1 Transport Protocol: CAN (SubFNID 706) *8*
4.1.2 Duplex Mode *9*
4.1.3 Frame Interleaving *9*
4.1.4 Addressing Schemes *9*
4.1.5 Message Types *9*
4.1.6 Addressing Types *12*
4.1.7 CAN Communication Failures *14*
4.1.8 CAN Timing Parameters *14*
4.1.9 SW Detail Requirements & Use Cases *15*

4.2 DIAGNOSTIC COMMUNICATION MANAGER (SUBFNID 709) 18
4.2.1 Dual Diagnosis *18*
4.2.2 Buffer Requirements *19*
4.2.3 Programming and configuration requirements *19*
4.2.4 Application: GM GlobalA Diagnostic Services (SubFNID 711) *19*
4.2.5 Negative Reponse ($7F) Definition *19*
4.2.6 Diagnostic Service Requirements *20*
4.2.7 DID Requirements *61*
4.2.8 PID Requirements *79*
4.2.9 CPID Requirements *88*
4.3 APPLICATION: SPEED LIMIT 103
4.3.1 Service $AE Device Control *103*
4.4 APPLICATION: FAULT MEMORY (SUBFNID 224) 103
4.4.1 Diagnostic Trouble Codes *103*

© This document is the exclusive property of Robert Bosch GmbH. Without their consent it may not be reproduced or given to third parties.
If printed this is a uncontrolled document. The user must verify it is an authorized edition prior to use.

A. HISTORY:

Version	Date Author	Chapter	Description
DRAFT V1.0	02.May.2013 Milda Leslie Puthoor	-	Intial version of Diaf for SGM GP50 ABS9.

© This document is the exclusive property of Robert Bosch GmbH. Without their consent it may not be reproduced or given to third parties.
If printed this is a uncontrolled document. The user must verify it is an authorized edition prior to use.

1 Explanations

1.1 Abbreviation

Acronym	Full name
EVP	Electrical Vacuum Pump

1.2 VAF names (GM/Bosch)

GM		Robert Bosch	
Acronym	Full name	Acronym	Full name
DRP	Dynamic Rear Proportioning	EBD	Electrical Brake Distribution
EDC	Engine Drag Control	DTC MSR	Drag Torque Control Motor Schlupf Regelung
ABS			
VSE	Vehicle Stability	ESP	Electronic…
LVHBA	Low Vacuum Hydraulic Brake Assist / Failed Boost Support	HBB / HBC	Hydraulic Brake Boost / Hydraulic Booster Compensation
CIB	Collision Imminent Braking / Crash Preparation Braking - Radar Based(CE bus input) Includes Commanded Hold (Includes ABA)	AEB	Includes ABA, ABP and AWB when this function is enabled
LSCMB	Low Speed Collision Mitigation Braking - Camera Based (HS Bus input) Includes Commanded Hold (Includes ABA)	AEB Low speed	Includes ABA, ABP and AWB when this function is enabled
ACC	Adaptive Cruise Control Base (NOT FSR)	CDD-B	
FSR ACC	Full Speed Range Adaptive Cruise Control Base Includes Commanded Hold	CDD-S	(Includes CDD-B when this function is enabled)
HSA	Hill Start Assist	HHC	Hill Hold Control
	Automatic Vehicle Hold	AVH	Automatic Vehicle Hold
	Hill Roll Back	RC	Hill Roll Back Control
ARP	Active Rollover Protection	RMF	Roll Movement Function
	Rear Brake Boost	HRB	Hydraulic Rear Wheel Boost
EPB	Dynamic Braking (Dynamic deceleration)	CDP	
	Trailer Sway Control	TSM-A	Trailer Sway Mitigation - A
	Steering Torque Overlay	DST	
	Rough Road Package	ORD	
	Caliper Compliance Mitigation	EBP	Electronic Brake Prefill
	Brake Cleaning	BDW	
FBS	Fading Brake Support	HFC	
	Competitive Mode		Sport Mode

© This document is the exclusive property of Robert Bosch GmbH. Without their consent it may not be reproduced or given to third parties.
If printed this is a uncontrolled document. The user must verify it is an authorized edition prior to use.

2. Short Description of Diagnostic Communication

Diagnostic communication provides the capability of quickly accessing information and functions of the control unit via external tester tools. Diagnostic communication provide services to:

- Identify the ECU
- Read input signals of the ECU
- Read input signals
- Write output signals to the actuators
- Read ECU-internal information (e.g. contents of the fault memory)

Diagnostic communication can be used for end-of-line testing or in the servicing workshop. The testing time can be reduced substantially by using the services provided by diagnosis.
This document describes the diagnostic communication functions and specifications of the diagnostic Session. The Flash Reprogramming Session is described in a separate document. Refer to TopFNID 0225 for more details.

© This document is the exclusive property of Robert Bosch GmbH. Without their consent it may not be reproduced or given to third parties.
If printed this is a uncontrolled document. The user must verify it is an authorized edition prior to use.

3 Context Information

3.1 Operational Environment

Within a vehicle, normally several ECUs exist. The ECUs share a common diagnostic bus: several ECUs are connected to this bus and an additional connector allows an external tester tool to be connected to the vehicle. This connector is known as the OBD (On Board Diagnosis) connector:

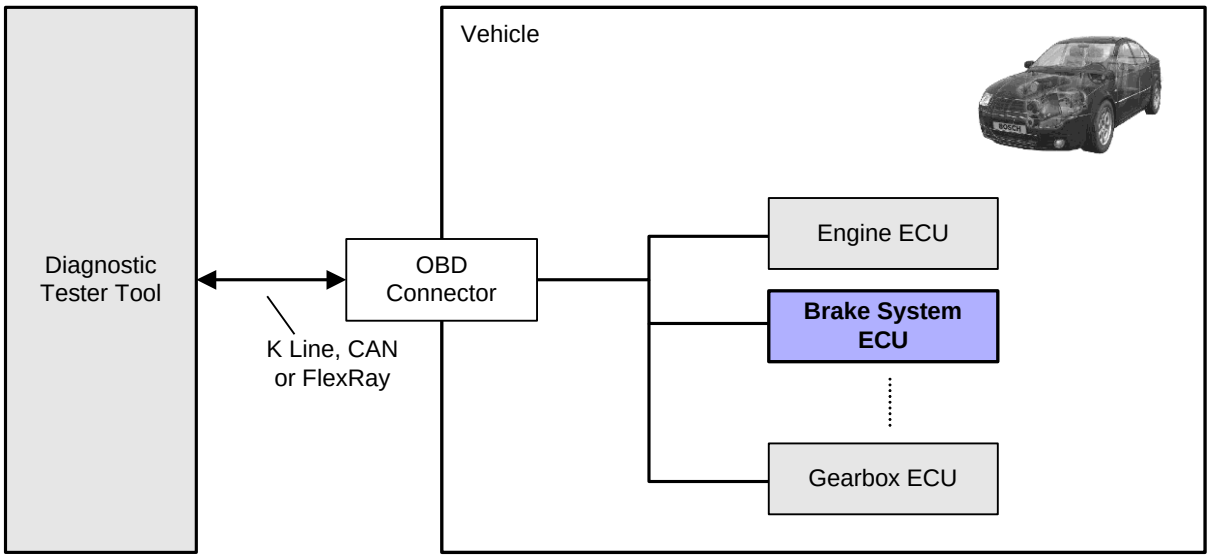

The communication with the Brake System ECU is possible as soon as the common enbale line is high (regardless of the system power mode)

3.2 Use Cases

The Diagnostic Tester Tool can be a production facility in the vehicle production plant or a tool that is used in the repair shop. These tester tools send diagnostic requests to the ECUs in the vehicle and evaluate the responses. As the brake system ECU is also part of the vehicle, all Bosch brake system ECU's support a diagnosis communication interface to transfer information from an ECU to an off-board tester and vice-versa.

The information transferred consists of ECU fault information, signal reporting, control routines, calibration values and many other types of data used either in performing ECU diagnostics, re-programming or any other data transfer not associated with normal node to node communication.
The diagnostic communication (DCOM) part of the software is described in the following sub-chapters: its main task is to maintain correct communication between tester tools and the brake system ECU.

3.3 Referenced Documents

3.3.1 International Documents

The general requirements of the diagnosis communication protocol are based on ISO requirements, specified in the following documents:
ISO 15765-2: Road Vehicles - Diagnostics on CAN: Network Layer Services
AUTOSAR Specification of Diagnostic Communication Manager, V3.1

© This document is the exclusive property of Robert Bosch GmbH. Without their consent it may not be reproduced or given to third parties.
If printed this is a uncontrolled document. The user must verify it is an authorized edition prior to use.

3.3.2 Customer Documents

GMW3110 Rev Feb 2010
GGSE ECU Diagnostic Infrastructure Requirements V5.1.1
Appendix C2.4 Brake Electrical SSTS Rev 1.0
VTD SSTS V6.1

© This document is the exclusive property of Robert Bosch GmbH. Without their consent it may not be reproduced or given to third parties.
If printed this is a uncontrolled document. The user must verify it is an authorized edition prior to use.

4 Requirements

4.1.1 Transport Protocol: CAN (SubFNID 706)

4.1.1.1 Data Stream

The ECU supports CAN diagnostic messages using both the Unacknowledged Segmented Data Transfer (USDT), as specified in ISO 15765-2, and the Unacknowledged Unsegmented Data Transfer (UUDT) messaging formats.

The USDT format refers to those messages which may be segmented into multiple CAN transmission frames, depending on the number of data bytes transmitted. The UUDT format refers to those messages which shall always be a single frame response. Accordingly the following two types of CAN data streams are supported:

4.1.1.2 Non-Segmented Data Stream

A non-segmented data stream consists of a Single Frame (SF). Non-segmented data stream are used for messages with a maximum data length of 7 data bytes in case of normal addressing.

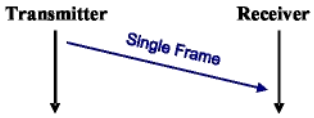

4.1.1.3 Segmented Data Stream

A segmented data stream consists of multiple frames of segmented CAN messages. A segmented data stream must be used if the maximum data length exceeds 7 data bytes in case of normal addressing and 6 data bytes in the case of extended addressing.

The data stream comprises a First Frame (FF) and a number of Consecutive Frames (CF) containing the subsequent data bytes, following the First Frame. The receiver has to send a Flow Control (FC) after reception of the First Frame.

The Flow Control contains information regarding Block Size and the Separation Time. The Block Size (BS) is the maximum number of Consecutive Frames the receiver allows the sender to send, before waiting for an authorisation (Additional Flow Control Frames) from the receiver to continue transmission. The Separation Time (Stmin) is the (minimum) time the sender has to wait between transmission of two consecutive frames.

© This document is the exclusive property of Robert Bosch GmbH. Without their consent it may not be reproduced or given to third parties.
If printed this is a uncontrolled document. The user must verify it is an authorized edition prior to use.

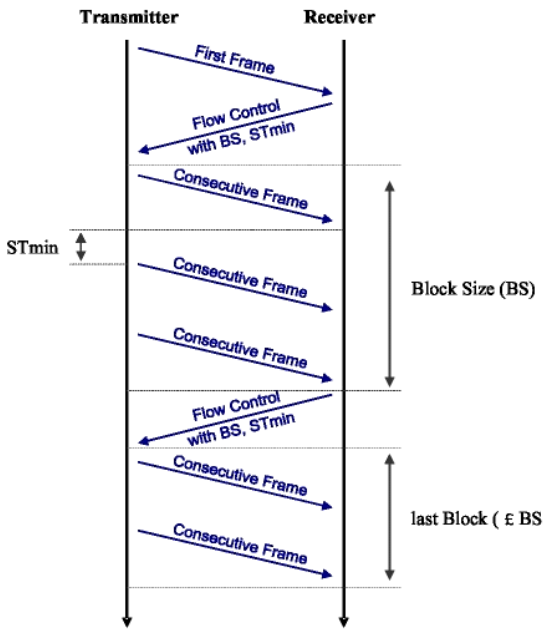

4.1.2 Duplex Mode

The ECU is supporting half-duplex CAN communication only. This means that CAN communication between a diagnostic tool and the ECU is only possible in one direction at the same time.

4.1.3 Frame Interleaving

The use of UUDT and USDT CAN Identifiers allows for interleaving of single frame responses (such as periodic data transmissions) with a multi-frame response (usually a one time data transmission) from the same node.

4.1.4 Addressing Schemes

Type	Identifier	Byte 0	Byte 1	Byte 2	Byte 3	Byte 4	Byte 5	Byte 6
NORMAL	CAN Id	Data	Data	Data	Data	Data	Data	Data
EXTENDED	CAN Id	EA	Data	Data	Data	Data	Data	Data

4.1.5 Message Types

Data Field Structure

Frame Type	**Byte 1**		**Byte 2**	**Byte 3**	**Byte 4 – 8**
	Bit 7- 4	**Bit 3 – 0**			
Single Frame (SF)	Type_SF = 0000B	SF_DL	DB 1	DB 2	DB 3 – 7
First Frame (FF)	Type_FF = 0001B	FF_DL		DB 1	DB 2 – 6
Consecutive Frame (CF)	Type_CF = 0010B	SN	DB x1	DB x2	DB x3-x7
Flow Control (FC)	Type_FC = 0011B	FS	BS	Stmin	N/A

© This document is the exclusive property of Robert Bosch GmbH. Without their consent it may not be reproduced or given to third parties.
If printed this is a uncontrolled document. The user must verify it is an authorized edition prior to use.

- SF_DL : 4 Bit Single Frame Data length
- FF_DL : 12 Bit First Frame Data length
- SN : Sequence Number
- FS : Flow Status of data stream
- BS : Block Size
- STmin : Minimum Separation Time
- DB : Contains the transmission data

4.1.5.1 Single Frame

A Single Frame message type is used for data messages with a maximum data length of 7 data bytes. The PCI Type 0000B identifies a Single Frame.

4.1.5.1.1 Single Frame Data Length (SF_DL):

Hex Value	Description
0h - 7h	Single Frame Data length (SF_DL) contains number of data Bytes
8h - Fh	Reserved

4.1.5.2 First Frame

Messages longer than 7 data bytes are segmented into a First Frame and one or more Consecutive Frames. The PCI Type 0001B identifies a First Frame.

4.1.5.2.1 First Frame Data Length (FF_DL):

Hex Value	Description
0h - FFFh	First Frame Data length (FF_DL) contains number of data bytes. 12 Bit FF_DL theoretically supports sending of up to 4096 data bytes. Note: The ECU supports segmented data messages up to maximally 50 data bytes.

4.1.5.3 Consecutive Frame

Consecutive Frames are following a First Frame. The PCI Type 0010B identifies a Consecutive Frame.

- The first Consecutive Frame always starts with Sequence Number 1.
- The Sequence Number is incremented by one for each additional Consecutive Frame.
- The Sequence Number (SN) value is not affected by any Flow Control (FC) frame.
- When the Sequence Number reaches the value of 15, the next Consecutive Frame will be sent with a Sequence Number set to 0.

4.1.5.3.1 Sequence Number (SN):

Hex Value	Description
0h - Fh	Sequence Number (SN) The Sequence Number has a range of 0 to 15. The Sequence Number is stored in the lower 4 bits of Byte 1.

© This document is the exclusive property of Robert Bosch GmbH. Without their consent it may not be reproduced or given to third parties.
If printed this is a uncontrolled document. The user must verify it is an authorized edition prior to use.

4.1.5.4 Flow Control

After the First Frame or the last Consecutive Frame of a block of frames (when further Consecutive Frames are required to complete the data transfer) the receiver must send a Flow Control (FC) frame. The PCI Type 0011B identifies a Flow Control Frame.

The flow control mechanism allows the receiver to inform the sender about the receiver's capabilities. The Flow Control contains information regarding Block Size and the Separation Time. The Block Size (BS) is the maximum number of Consecutive Frames the receiver allows the sender to send, before waiting for an authorisation (Additional Flow Control Frames) from the receiver to continue transmission. The Separation Time (STmin) is the (minimum) time the sender has to wait between transmission of two consecutive frames.

4.1.5.4.1 Flow Status (FS):

Hex Value	Description
0h	Continue To Send (CTS) The Receiver is ready and is waiting for maximally BS Consecutive Frames
1h	Wait (WT) Sender is not allowed to continue sending and must wait until Flow Control CTS is received
2h	Overflow (OVFLW) Sender must abort the transmission of a segmented message. Overflow shall only be used in case the message length (FF_DL) of the received First Frame exceeds the buffer size of the receiving entity. Note: the FS parameter Overflow is not permitted by the GMW3110 specification
3 – Fh	Reserved

4.1.5.4.2 Block Size (BSmax):

Hex Value	Description
00h	Block Size (BS) Indicates that no more Flow Control (FC) frames are allowed during transmission of the segmented data frame. All Consecutive Frames (CF) will be send without any stop for further Flow Control frames.
01h - FFh	Block Size (BS) Defines the maximal amount of Consecutive Frames (CF) that can be received without an intermediate Flow Control (FC) frame.

4.1.5.4.3 Separation Time (Stmin):

Hex Value	Description
00h - 7Fh	Separation Time (STmin) Range: 0 ms – 127 ms The units of STmin in the range 00 hex – 7F hex are absolute milliseconds (ms).
80h – F0h	Reserved
F1h – F9h	Separation Time (STmin) Range: 100 µs – 900 µs The units of STmin in the range F1 hex – F9 hex are even 100 microseconds (µs), where parameter value F1 hex represents 100 µs and parameter value F9 hex represents 900 µs.
FAh – FFh	Reserved

© This document is the exclusive property of Robert Bosch GmbH. Without their consent it may not be reproduced or given to third parties.
If printed this is a uncontrolled document. The user must verify it is an authorized edition prior to use.

4.1.6 Addressing Types

4.1.6.1 Physical Addressing Type

Physical addressing is used for a point-to-point communication between the diagnostic tool and the ECU (1:1 communication).

All diagnostic response messages from the ECU will be physically addressed, using one of the physical response CAN Identifiers (refer to section "CAN Identifiers).

Physically addressed request messages, i.e. USDT Response messages, and UUDT Response messages shall use a normal addressing frame format where the CAN Id is the only data used to indicate the target node.

4.1.6.1.1 Diagnostic Request Frames (Normal Addressing Scheme)

Type	Identifier	Byte 0		Byte 1	Byte 2	Byte 3	Byte 4	Byte 5	Byte 6	Byte 7
NORMAL - Single Frame (SF)	CAN Id	TPCI		SIDRQ	Data	Data	Data	Data	Data	Data
		Type	SF_DL							
NORMAL- First Frame (FF)	CAN Id	TPCI		SIDRQ	Data	Data	Data	Data	Data	Data
		Type	FF_DL							
NORMAL - Consecutive Frame (CF)	CAN Id	TPCI		Data	Data	Data	Data	Data	Data	Data
		Type	SN							

4.1.6.1.2 Diagnostic USDT Response (Normal Addressing Scheme)

Type	Identifier	Byte 0		Byte 1	Byte 2	Byte 3	Byte 4	Byte 5	Byte 6	Byte 7
NORMAL - Single Frame (SF)	CAN Id	TPCI		SIDPR	Data	Data	Data	Data	Data	Data
		Type	SF_DL							
NORMAL- First Frame (FF)	CAN Id	TPCI		SIDPR	Data	Data	Data	Data	Data	Data
		Type	FF_DL							
NORMAL - Consecutive Frame (CF)	CAN Id	TPCI		Data	Data	Data	Data	Data	Data	Data
		Type	SN							

4.1.6.1.3 Diagnostic Flow Control (Normal Addressing Scheme)

Type	Identifier	Byte 0		Byte 1	Byte 2	Byte 3	Byte 4	Byte 5	Byte 6	Byte 7
Flow Control Frame (FC)	CAN Id	PCI				n/a	n/a	n/a	n/a	n/a
		Type	FS	BS	STmin					

4.1.6.1.4 Diagnostic UUDT Response (Normal Addressing Scheme)

Type	Identifier	Byte 0	Byte 1	Byte 2	Byte 3	Byte 4	Byte 5	Byte 6	Byte 7
NORMAL – UUDT Frame	CAN Id	Data	Data	Data	Data	Data	Data	Data	Data

© This document is the exclusive property of Robert Bosch GmbH. Without their consent it may not be reproduced or given to third parties.
If printed this is a uncontrolled document. The user must verify it is an authorized edition prior to use.

4.1.6.2 Functional Addressing Type

Functional addressing is used for broadcast communication between the diagnostic tool and all connected ECUs (1:n communication).

Functionally addressed request messages shall always be Single Frame and shall use the extended addressing frame format, where the combination of CAN ID (one of the reserved Functional CAN IDs) and an additional data byte (extended address byte, or EA) indicates the target node(s). Usually, the extended address byte will designate a node or group of nodes operating as a specific functional subsystem.

All resulting response messages from a functionally addressed request will be formatted as physical diagnostic responses with normal addressing (USDT single or multi-frame response, or a UUDT response). Diagnostic request messages using extended addressing shall always be USDT messages.

4.1.6.2.1 Diagnostic Request (Extended Addressing Scheme)

Type	Identifier	Byte 0	Byte 1		Byte 2	Byte 3	Byte 4	Byte 5	Byte 6
EXTENDED - Single Frame (SF)	CAN Id	EA	TPCI		SIDRQ	Data	Data	Data	Data
			Type	SF_DL					

4.1.6.2.2 Supported Extended Addresses (EA)

The following table lists the standardised functional systems with their associated Extended Address (EA) supported by the EBCM on the GMLAN network.

Functional System Name	Functional System Address (EA)
All Functional Systems (All Node)	$FE
Gateway Devices	$FD

© This document is the exclusive property of Robert Bosch GmbH. Without their consent it may not be reproduced or given to third parties.
If printed this is a uncontrolled document. The user must verify it is an authorized edition prior to use.

4.1.7 CAN Communication Failures

4.1.7.1 Unexpected Messages

As a general rule, the arrival of an unexpected message or a message with illegal format from any node will be ignored.

4.1.7.2 Missing Messages

If the ECU is detecting a communication failure (e.g. timing violations of the Network Layer) during a diagnostic tool request, the ECU discards the request and no response will be sent.
TODO: VALUE entries in two chapters below have to be adjusted for project / customer needs. Remove this item afterwards.

4.1.7.3 CAN Identifiers

Description	Name	Address Type	Address Scheme	CAN-ID
CAN Identifier for AllNodeRequest	CANID_REQ_FUNC_HS	Functional	Extended	101
CAN Identifier for USDT request	CANID_REQ_PHYS_HS	Physical	Normal	243
CAN Identifier for UUDT response	CANID_UUDT_RES_PHYS_HS	Physical	Normal	543
CAN Identifier for USDT response	CANID_USDT_RES_PHYS_HS	Physical	Normal	643
CAN Identifier for AllNodeRequest	CANID_REQ_FUNC_CE	Functional	Extended	101
CAN Identifier for USDT request	CANID_REQ_PHYS_CE	Physical	Normal	243
CAN Identifier for UUDT response	CANID_UUDT_RES_PHYS_CE	Physical	Normal	543
CAN Identifier for USDT response	CANID_USDT_RES_PHYS_CE	Physical	Normal	643

4.1.8 CAN Timing Parameters

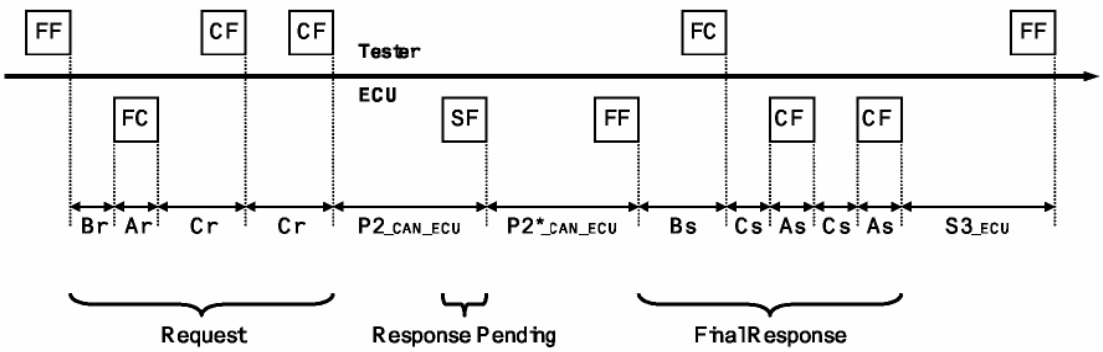

© This document is the exclusive property of Robert Bosch GmbH. Without their consent it may not be reproduced or given to third parties.
If printed this is a uncontrolled document. The user must verify it is an authorized edition prior to use.

4.1.8.1 Performance Parameters

Parameter	Description	Min	Max
N_Br	Maximum time for the receiver of a multi-frame message to transmit a flow control frame after receiving the first frame (FF)		100
N_Cs	Maximum time from either receiving a flow control clear to send (FC.ClrTS) frame or transmitting a consecutive frame (CF) until transmitting the next CF		100
P2_CAN_ECU	Performance requirement for the ECU to start with the response message after the reception of a request message	0	100
P2*_CAN_ECU	Performance requirement for the ECU to start with a further response message after transmission of a negative response message with negative response code 78h (Response Pending)	0	5000
P3_CAN_ECU	Minimal time between the response from the ECU and the next request from the tester	5ms	

4.1.8.2 Timeout Parameters

Parameter	Description	Timeout Value
N_As / N_Ar	Time from transmit request until a CAN frame transmit confirmation is received	250 ms
N_Bs	Time that the transmitter of a multi-frame message shall wait to receive a flow control (FC) frame before timing out with a network layer error.	250 ms
N_Cr	Time that the receiver of a multi-frame (MF) message shall wait to receive a consecutive frame (CF) after sending a flow control (FC) frame or receiving the previous consecutive frame (CF) before timing out with a network layer error.	250 ms
S3_ECU	Timeout for a ECU wait for any diagnostic request message to keep a diagnostic session other than Default Session active	5000 ms

4.1.9 SW Detail Requirements & Use Cases

4.1.9.1 Extensions to AUTOSAR / ISO15765-2

4.1.9.2 Generic

If a P3C timeout occurs while the ECU is in the process of receiving or transmitting a multi-frame USDT diagnostic message, the unsolicited service $20 positive response message shall be delayed until after the multi-frame message (reception or transmission) has completed.

Each ECU shall be able to receive and process a functionally addressed TesterPresent request message in between the reception/transmission of a physically addressed single or multi-frame request/response message and during an active enhanced response timing in order to reset its P3C timer.

The node shall be able to receive and process a physically addressed message after receiving a (functional) Tester Present message.

© This document is the exclusive property of Robert Bosch GmbH. Without their consent it may not be reproduced or given to third parties.
If printed this is a uncontrolled document. The user must verify it is an authorized edition prior to use.

4.1.9.3 Communicaton Rules

The node shall be able to receive and process all tester requests which comply with the following tester communication rules:

New Request Addressing Type	Previous Request Addressing Type	Handling in the Tester
Physical	Physical	Wait until the completion of the previous physical request (positive response, or negative response other than $78) before transmitting a new physical request.
Physical	Functional with response	Wait until the completion of the previous functional request that requires a response (positive response, or negative response other than $78) before transmitting the physical request.
Physical	Functional without response	The tester is allowed to transmit the physical request immediately (e.g., functional TesterPresent followed by any physical request).
Functional without response	Physical	The tester is allowed to transmit the functional request that does not require a response immediately (e.g., any physical request followed by a functional TesterPresent).
Functional without response	Functional with response	Wait 30 ms after the transmission of the functional request that requires a response before transmitting the functional request that does not require a response.
Functional without response	Functional without response	Wait 30 ms after the transmission of the functional request that does not require a response before transmitting the next functional request that does not require a response.
Functional with response	Physical	Wait until the completion of the previous physical request (positive response, or negative response other than $78) before transmitting the functional request that requires a response.
Functional with response	Functional with response	Wait until the completion of the previous functional request that requires a response (positive response, or negative response other than $78) before transmitting the next functional request that requires a response.
Functional with response	Functional without response	Wait 30 ms after the transmission of the functional request that does not require a response before transmitting the functional request that requires a response.

4.1.9.3.1 CAN Frame Data Padding

GMLAN ECUs shall be capable of receiving diagnostic request messages that are padded.
GMLAN ECUs shall be capable of receiving diagnostic messages that are not padded.
ECU is sending "non-padded CAN data frames"

4.1.9.3.2 Flow Control Frames

4.1.9.3.2.1 Reception:

The values described in the table below are the minimum requirements for the ECU to support when receiving a flow control frame.

Parameter	Description	Value	Performance Requirement Value

© This document is the exclusive property of Robert Bosch GmbH. Without their consent it may not be reproduced or given to third parties.
If printed this is a uncontrolled document. The user must verify it is an authorized edition prior to use.

WFTmax	Wait Frame Transmission	0	No Flow Control wait frames are allowed. The Flow Control frame sent by the tester following the First Frame of an ECU response message shall contain the Flow Status FS set to 0 (ClearToSend), which forces the ECU to start immediately after the reception of the Flow Control frame with the transmission of the Consecutive Frame(s).
BS	Block Size	0	The Flow Control BS parameter value of the first Flow Control frame following the First Frame of an ECU response message shall be zero, which means that all following Consecutive Frames of the response message are sent in one block by the ECU without any subsequent Flow Control frame sent by the tester.
STmin	Separation Time	0	The Flow Control STmin parameter value of the Flow Control frame shall be zero (minimum time between consecutive frames). The tester shall be able to receive back-to-back Consecutive Frames sent by one or multiple ECU(s) in response to a physically or functionally addressed request message.

The ECU may support flow control parameter values over and above the minimum specified. However, anytime an ECU receives a flow control frame with parameter values that the ECU does NOT support, the ECU shall treat the received frame as an invalid frame and discard it. The ECU shall continue to wait for a valid flow control frame until one is received, or the relevant transport layer timeout occurs.

4.1.9.3.2.2 Transmission:

A GMLAN ECU shall support the following network layer parameters when transmitting flow control frames:

Parameter	Description	Value	Performance Requirement Value
WFTmax	Wait Frame Transmission	0	No Flow Control wait frames are allowed. The Flow Control frame sent by the ECU following the First Frame of a tester request message shall contain the Flow Status FS set to 0 (ClearToSend), which forces the tester to start immediately after the reception of the Flow Control frame with the transmission of the Consecutive Frame(s).

© This document is the exclusive property of Robert Bosch GmbH. Without their consent it may not be reproduced or given to third parties.
If printed this is a uncontrolled document. The user must verify it is an authorized edition prior to use.

BS	Block Size	0	The Flow Control BS parameter value of the first Flow Control frame following the First Frame sent by a tester shall be zero, which means that all following Consecutive Frames sent in a row by the tester without any subsequent Flow Control frame sent by the ECU.
STmin	Separation Time	10ms	The Flow Control STmin parameter value of the Flow Control frame (minimum time between consecutive frames) shall be adjusted to allow the ECU to receive and process a Consecutive Frame before receiving the next Consecutive Frame.

The maximum polling rate for diagnostic message objects shall be < 30msec as per the GMW3110 requirement.

4.2 Diagnostic Communication Manager (SubFNID 709)

4.2.1 Dual Diagnosis

4.2.1.1 General:

The tester is only allowed to transmit diagnostic messages on the subnet in which it is connected to.
If a diagnostic message is targeted to all GMLAN subnets, the tester must transmit the message on each specific subnet
The Gateways (i.e the EBCM) should not transmit diagnostic messages from the tester accross subnets.
The diagnostic services should only be processed on the subnet which it is received.
The EBCM can be fully diagnosed on the HS-Bus.
Nevertheless most of the services are also supported on the CE-bus (see "*Summary of supported diagnosis services"* for more details)

4.2.1.2 Programming

A programming event should be possible on the HS-Bus and the diagnostic Services used to initiate or conclude a programming event should be processed on the HS-Bus.

A programming event is initiated with following functionaly addressed sequence (with a periodic tester present request $3E):

- $28 Disable Normal Communication (= bus silent)
- $1A Read Data by Identifier (= identify the different ECUs connected on the bus)
- $A5 Request and Enable Programming Mode

A programming event is conclude by sending a functionaly addressed $20 request. Node shall support the DIDs required for programming on the HS-Bus. Reference to chapter on 'DID Requirements' for mor details
The ESC EBCM can only be programmed on the HS-Bus and Service $A2 Report Programmed State is only supported on the HS-Bus.

4.2.1.3 Processing of Simultaneous Diagnostic Requests

If a MSSC receives diagnostic requests on both subnets simultaneously, it must respond to each request within the P2C time. (ECU needs to send a response within 100ms, the tester needs to wait at least 150ms).

For simulataneous requests on the HS-Bus and CE-Bus of a diagnostic services supported on both busses, the EBCM should send either:

- The positive response on each subnet within P2c (max 100ms), **OR**
- The MSSC node sends the positive response on one subnet while sending a negative response $7F.

© This document is the exclusive property of Robert Bosch GmbH. Without their consent it may not be reproduced or given to third parties.
If printed this is a uncontrolled document. The user must verify it is an authorized edition prior to use.

RequestServiceId $78 message on the second subnet within P2c, followed by the positive response after transmitting the positive response on the first subnet. The exceptions are modes $20, $28, and $A5 (subfunction $03) where the NRC $78 is not allowed.

For simultaneous requests of diagnostic services only supported on one subnet, the EBCM should send the positive response on the subnet supporting the service while sending a NRC $11 (Service not Supported) on the other subnet.

4.2.2 Buffer Requirements

The size of the network layer buffers will be optimised to minimise RAM requirements while still allowing for the reception and transmission of the largest normal communications or diagnostic message expected by the ECU. The size of the network layer Rx and Tx buffers is 100 bytes.

4.2.3 Programming and configuration requirements

The programming and/or configuration of the EBCM can be accomplished via utility file programming or XML configuration.

- The creation of the utility file is taken care of by the supplier.
- The creation of the xm file is taken care of by the cutomer.

4.2.4 Application: GM GlobalA Diagnostic Services (SubFNID 711)

4.2.5 Negative Reponse ($7F) Definition

The negative response service shall be used by an ECU to indicate that a diagnostic service request message is either invalid, being terminated, or currently cannot be acted upon at the time of the request.
This service shall use the USDT response CAN Identifier when transmitted on the link.

4.2.5.1 Negative Response Message Format

Byte	Description	Hex Value
1	Negative Reponse Service Id	7F
2	Request Service Id	Xx
3	Return Code	Xx
4-5	Device Control Limit Exceeded = [ExceededLimitMSB ExceededLimitLSB]	 Xx Xx

Note: if the Return Code is $E3 then the Device Contrl Limit Exceeded parameter is appended.

4.2.5.2 Return Code Definitions

Negative response code $11 - ServiceNotSupported shall be used when the ECU receives a physical request for an unsupported service.

Note: If a service is not supported on a specific bus and a physical request is received on that bus, then the ECU responds with a negative response code $11 – ServiceNotSupported.
Suppported negative response codes for each service are documented in the section "Diagnostic Service Requirements".

© This document is the exclusive property of Robert Bosch GmbH. Without their consent it may not be reproduced or given to third parties.
If printed this is a uncontrolled document. The user must verify it is an authorized edition prior to use.

4.2.6 Diagnostic Service Requirements

4.2.6.1 Summary table of supported Diagnostic Services

SID		Physical	Functional	Resp on phys	Resp on func	Multi (UUDT)	Periodic (UUDT)	HS-bus	CE-bus	Works in System Power Mode OFF
$04	ClearDiagnosticInformation	X	X	X	X			X	X	X
$10	InitiateDiagnosticOperation:									
	$02: DisableAllDTCs	X	X	X	X			X[1]	X[1]	X
	$03: EnableDTCsDuringDevCntrl	X	X	X	X			X[1]	X[1]	X
$12	ReadFailureRecordData									
	$01: ReadFailureRecordIdentifiers	X		X				X		
	$02: ReadFailureRecordParameters	X		X				X		
$1A	ReadDataByIdentifier[2]	X	X	X	X			X[4]	X[4]	X
$20	ReturnToNormalMode[2]	X	X	X	X			X[4]	X[4]	X
$22	ReadDataByParameterIdentifier	X	X	X	X			X		X
$23	ReadMemoryByAddress	X	-	X	-			X		X
$27	SecurityAccess:									
	$01: SPSRequestSeed	X		X				X[4]	X	X
	$02: SPSSendKey	X		X				X[4]	X	X
	$03: DevCntrlRequestSeed	X		X				X	X	

© This document is the exclusive property of Robert Bosch GmbH. Without their consent it may not be reproduced or given to third parties.
If printed this is a uncontrolled document. The user must verify it is an authorized edition prior to use.

SID		Physical	Functional	Resp on phys	Resp on func	Multi (UUDT)	Periodic (UUDT)	HS-bus	CE-bus	Works in System Power Mode OFF
	$04: DevCntrlSendKey	X		X				X	X	
$28	DisableNormalCommunication[2]	X	X	X	X			X[4]	X[4]	X
$2C	DynamicallyDefineMessage	X	X	X	X			X		X
$34	RequestDownload[3]	X	X	X	X			X[4]		X
$36	TransferData[3]									
	$00: Download	X	X	X	X			X[5]		X
	$80: DownloadAndExecuteOrExecute	X	X	X	X			X[5]		X
$3B	WriteDataByIdentifier	X	X	X	X			X		X
$3E	TesterPresent[2]	X	X	X				X	X[4]	X
$A2	ReportProgrammedState[3]	X	X	X	X			X[4]		X
$A5	ProgrammingMode[2]									
	$01: RequestProgrammingMode	X	X	X	X			X[4]	X[4]	X
	$03: EnableProgrammingMode	X	X					X[4]	X[4]	X
$A9	ReadDiagnosticInformation:									
	$80: ReadStatusOfDTCByNumber	X	X	X	X			X	X	X

© This document is the exclusive property of Robert Bosch GmbH. Without their consent it may not be reproduced or given to third parties.
If printed this is a uncontrolled document. The user must verify it is an authorized edition prior to use.

SID		Physical	Functional	Resp on phys	Resp on func	Multi (UUDT)	Periodic (UUDT)	HS-bus	CE-bus	Works in System Power Mode OFF
	$81: ReadStatusOfDTCByStatusMask	X	X	X	X	X		X	X	X
$AA	ReadDataByPacketIdentifier:									
	$00: StopSending	X	X	X	X			X		X
	$01: SendOneResponse	X	X	X	X			X		X
	$02: ScheduleAtSlowRate	X	X	X	X	X	X	X		X
	$03: ScheduleAtMediumRate	X	X	X	X	X	X	X		X
	$04: ScheduleAtFastRate	X	X	X	X	X	X	X		X
$AE	DeviceControl	X	X	X	X			X		X

Note 1: If this service has already been requested on one bus, then a request on the second bus will be rejected with NRC $22 *Conditions not Correct*
Note 2: These services are working simultaneously and independently on each bus.
Note 3: These services are only supported on the programmable bus (CE-bus)
Note 4: These services are supported in the operational SW and the bootloader
Note 5: These services are only supported in the bootloader

4.2.6.2 Service $04 - ClearDiagnosticInformation

4.2.6.2.1 *Overview:*

The ClearDiagnosticInformation service is used to clear diagnostic information in one or multiple nodes' memory.
DTC information cleared by this service:

- DTC status byte
- Failure record information (see mode $12)
- DTC related data

(but does <u>not</u> erase the content of DID $06 DTC freeze frame)

© This document is the exclusive property of Robert Bosch GmbH. Without their consent it may not be reproduced or given to third parties.
If printed this is a uncontrolled document. The user must verify it is an authorized edition prior to use.

The node shall send a positive response upon receipt of a ClearDiagnosticInformation request even if no DTCs are stored.
The controller shall NOT perform a reset when a ClearDiagnosticInformation request is received.
A clear code will delete the complete customer failure memory and the record identifiers will not be available anymore using service $12.

A clear code will not delete the Bosch failure memory and the record identifiers located in EEPROM are still available when reading DID $06.

4.2.6.2.2 *Restrictions specific to the ESP project:*

This Service cannot be accessed in parallel on both busses.
If a request for this Service is received on one bus while the DTC are in the process of being cleared on a second bus, then the request will be rejected with NRC $22 Conditions not correct.

4.2.6.2.3 *Request Message Definition:*

Byte	Description	Hex Value
1	ClearDiagnosticInformation Request Service Id	04

4.2.6.2.4 *Positive Response Message:*

Byte	Description	Hex Value
1	ClearDiagnosticInformation Positive Response Service Id	44

4.2.6.2.5 *Negative Response Code Conditions:*

Hex Value	Description
12	**SubFunctionNotSupported-InvalidFormat** This response code shall occur if the length of the request message is incorrect.
22	**ConditionsNotCorrectOrRequestSequenceError (specific to the ESP project)** This response code shall be sent if: The DTC are already being cleared on the second bus when the request is received on the first bus.
78	**RequestCorrectlyReceived-ResponsePending** This response code can be sent if the ECU is not capable of processing additional diagnostic requests while the DTC clear is taking place. In this case, the final positive response shall be sent upon completion of the DTC clear or once the ECU can accept further diagnostic requests (prior to the finishing of the DTC clear). The ECU shall also reset and temporarily disable the P3C timer (if the P3C timer is active) for the duration that the ECU is performing the DTC clear and is not capable of receiving diagnostic requests.

4.2.6.3 Service $10 - InitiateDiagnosticOperation

4.2.6.3.1 *Overview:*

The InitiateDiagnosticOperation Service is used to perform the following tasks:
- Disable the setting of all DTC's while the tool continues to perform other diagnostic services
- Allow ECU DTC algorithms to continue to execute while the DeviceControl ($AE) service is active

The disableAllDTCs ($02) and enableDTCsDuringDevCntrl ($03) levels of this service require that a TesterPresent ($3E) message be sent within the P3 timing window in order to keep the functionality active.

© This document is the exclusive property of Robert Bosch GmbH. Without their consent it may not be reproduced or given to third parties.
If printed this is a uncontrolled document. The user must verify it is an authorized edition prior to use.

If a sub-function parameter has been requested by the tester, which is already running, the ECU shall send a positive response message.
If the ECU sends a negative response message to a request for this service, any levels active due to previous requests shall continue to remain active.

4.2.6.3.2 Restrictions:

This service cannot be accessed if the speed limit is greater than 3km/h.
If this service has been accessed and the speed is becoming greater than 3km/h, then the system will return to normal mode.
This speed limit monitoing can be disabled by requesting service $27 with subfunctions $03/04 DevCntrl (see description of service $27 for more information).
This service cannot be accessed in parallel from both busses.
If this service has already been requested on one bus, then a request on the second bus will be rejected with NRC $22 ConditionsNotCorrect

4.2.6.3.3 Sub-function: DisableAllDTCs ($02):

This level shall disable setting of all DTCs (confirm if the setting is disabled or only the storing in history)

4.2.6.3.3.1 *Request Message:*

Byte	Description	Hex Value
1	InitiateDiagnosticOperation Request Service Id	10
2	Sub-function = disableAllDTCs	02

4.2.6.3.3.2 *Positive Response Message:*

Byte	Description	Hex Value
1	InitiateDiagnosticOperation Positive Response Service Id	50

4.2.6.3.4 Sub-function: EnableDTCsDuringDevCntrl ($03):

This level shall be used to allow DTC algorithm to continue to execute while the DeviceControl ($AE) service is active.
This request has to be sent prior to activating DeviceControl or the request will be rejected with NRC $22.
If this service and level are not requested before entering DeviceControl, then DTCs shall be inhibited while DeviceControl is active. (default state: DTC disabled)
If another diagnostic service is requested which disables DTCs (after the request is sent to allow DTCs to run during DeviceControl), then DTCs shall become inhibited until a TesterPresent occurs or a $20 service is requested.

4.2.6.3.4.1 Request Message:

Byte	Description	Hex Value
1	InitiateDiagnosticOperation Request Service Id	10
2	Sub-function = enableDTCsDuringDevCntrl	03

© This document is the exclusive property of Robert Bosch GmbH. Without their consent it may not be reproduced or given to third parties.
If printed this is a uncontrolled document. The user must verify it is an authorized edition prior to use.

4.2.6.3.4.2 Postive Response Message:

Byte	Description	Hex Value
1	InitiateDiagnosticOperation Positive Response Service Id	50

4.2.6.3.5 *Negative Response Codes*

Hex Value	Description
12	**SubFunctionNotSupported-InvalidFormat** 1. The length of the request message is invalid (has to be 2 bytes long) 2. The ECU does not support the sub-function parameter value (only sub-function $02 and $03 supported)
22	**ConditionsNotCorrectOrRequestSequenceError** 1. This return code shall be sent if DeviceControl is active when a request for this service is received with the sub-function parameter set to $03. 2. This return code shall be sent if a request for this service is received with the sub-function parameter set to $03 and another diagnostic service has already disabled DTCs: - $28 Disable Normal Communication - $10 02 Disable DTCs - $AE Device Control 3. This return code shall be sent if the diagnostic operation has already been initiated on a different bus. 4. This return code shall be sent if the speed limit is greater than 3km/h when the request is received.
78	**RequestCorrectlyReceived-ResponsePending** This return code shall be sent if it will take more than P2C ms to process this request.

4.2.6.4 Service $12 - ReadFailureRecordData

4.2.6.4.1 *Overview:*

This service is used to obtain failure record information that was captured due to a fault detected within the node.
The EBCM shall be able to store full failure records for the last 10 DTC's that have been set.

4.2.6.4.2 *Sub-function: ReadFailureRecordIdentifiers ($01):*

ReadFailureRecordIdentifiers ($01) allows a tester to read the failure record identidiers.
This failure record identifier is necessary to send a request to retrieve the failure record parameters (subfunction $02)
A failiure record identifier is made up of a failure record number and a DTC identifier.

4.2.6.4.2.1 Request Message:

Byte	Description	Hex Value
1	ReadFailureRecordData Request Service Id	12
2	Sub-function = readFailureRecordIdentifiers	01

© This document is the exclusive property of Robert Bosch GmbH. Without their consent it may not be reproduced or given to third parties.
If printed this is a uncontrolled document. The user must verify it is an authorized edition prior to use.

4.2.6.4.2.2 Positive Response Message:

Byte	Description	Hex Value
1	ReadDataByIdentifier Positive Response Service Id	52
2	Sub-function = readFailureRecordIdentifiers	01
3	failureRecordDataStructureIdentifer = [PID]	00
4 5 6 7	failureRecordIdentifier#1 = [failureRecordNumber DTC High Byte DTC Low Byte DTC FTB]	Xx Xx Xx Xx
…	…	…
n-3 n-2 n-1 n	failureRecordIdentifier#m = [failureRecordNumber DTC High Byte DTC Low Byte DTC FTB]	Xx Xx Xx Xx

The failure record number starts at $01.
If the node has no failure record linked to a stored DTC, then the positive response should be 0x52 0x01 0x00.

4.2.6.4.3 *Sub-function: ReadFailureRecordParameters ($02):*

ReadFailureRecordParameters ($02) allows a tester to read the failure record parameters for a single failure record.
The failure record parameters provide information about the operating conditions of the vehicle at the time the DTC is logged.

4.2.6.4.3.1 Request Message:

Byte	Description	Hex Value
1	ReadFailureRecordData Request Service Id	12
2	Sub-function = readFailureRecordParameters	02
3 4 5 6	failureRecordIdentifier = [failureRecordNumber DTC High Byte DTC Low Byte DTC FTB]	Xx Xx Xx Xx

© This document is the exclusive property of Robert Bosch GmbH. Without their consent it may not be reproduced or given to third parties.
If printed this is a uncontrolled document. The user must verify it is an authorized edition prior to use.

4.2.6.4.3.2 Positive Response Message:

Byte	Description	Hex Value
1	ReadFailureRecordData PositiveResponse Service Id	52
2	Sub-function = readFailureRecordParameters	02
3 4 5 6	failureRecordIdentifier = [failureRecordNumber DTC High Byte DTC Low Byte DTC FTB]	Xx Xx Xx Xx
7-20	Fault Record	Xx

© This document is the exclusive property of Robert Bosch GmbH. Without their consent it may not be reproduced or given to third parties.
If printed this is a uncontrolled document. The user must verify it is an authorized edition prior to use.

4.2.6.4.3.2.1 Fault Record Definition:

Byte	Bit	Name	Units	Range	Scaling	Conversion	Signed
1		General status at last failure				(USN, 1 Byte)	
	7	DRP Active		0-1	1=Yes, 0= No		
	6	VSE Active		0-1	1=Yes, 0= No		
	5	TCS Active		0-1	1=Yes, 0= No		
	4	ABS Active		0-1	1=Yes, 0= No		
	3	EDC Active		0-1	1=Yes, 0= No		
	2	TCS Available (Not been overriden) Satus		0-1	1=Yes, 0= No		
	1	VSE Available (Not been overriden) Satus		0-1	1=Yes, 0= No		
	0	Brake Switch		0-1	1=Yes, 0= No		
2	All	Filtered LF Wheel Speed at Last Fault Code Set	KPH	0-255	E=N*1	(USN, 1 Byte)	No
3	All	Filtered RF Wheel Speed at Last Fault Code Set	KPH	0-255	E=N*1	(USN, 1 Byte)	No
4	All	Filtered LR Wheel Speed at Last Fault Code Set	KPH	0-255	E=N*1	(USN, 1 Byte)	No
5	All	Filtered RR Wheel Speed at Last Fault Code Set	KPH	0-255	E=N*1	(USN, 1 Byte)	No
6	All	Ignition Cycles Since Last Fault Code Set	Count	0-255	E=N*1	(USN, 1 Byte)	No
7	All	Number of Occurrences of Last Fault Code	Count	0-255	E=N*1	(USN, 1 Byte)	No
8-9	All	Bosch Monitoring Identifier				(USN, 2 Bytes)	
10	All	Longitudinal Acceleration (Actual or Calculated)	G	+/- 1.28	E=N*0.01	(USN, 1 Byte)	Yes
11	All	Lateral Accelerometer Input (Filtered) at Last Fault Set	G	+/- 1.28	E=N*0.01	(USN, 1 Byte)	Yes
12	All	Yaw Rate (Filtered) at Last Fault Code Set	Deg/Sec	+/- 75	E=N* 0.590551	(USN, 1 Byte)	Yes
13	All	Steering Wheel Angle at Last Fault Code Set	Degrees	+/-720	E=N* 5.669291	(USN, 1 Byte)	Yes
14	All	Master Cylinder Pressure at Last Fault Set	Bar	0-255	E=N*1	(USN, 1 Byte)	No

This information is not influenced by an ignition cycle

© This document is the exclusive property of Robert Bosch GmbH. Without their consent it may not be reproduced or given to third parties.
If printed this is a uncontrolled document. The user must verify it is an authorized edition prior to use.

4.2.6.4.4 *Negative Response Code Conditions:*

Hex Value	Description
12	**SubFunctionNotSupported-InvalidFormat** 1. A readFailureRecordIdentifiers request message does not contain one data byte following the service identifier. 2. A readFailureRecordParameters request message does not contain five data bytes following the service identifier. 3. The request message contains a sub-parameter which is not supported.
31	**RequestOutOfRange** A request for the parameters in a failure record contains a failure record identifier (failure record number + DTC identifier) that does not correspond to a single unique failure record or is not a valid failure record identifier for the node.
78	**RequestCorrectlyReceived-ResponsePending**

4.2.6.5 Service $1A - ReadDataByIdentifier

4.2.6.5.1 *Overview:*

ReadDataByIdentifier Service (RDBID) is used to read the content of pre-defined ECU data referenced by a dataIdentifier (DID) which contains static information such as ECU identification data or other information which does not require real-time updates.
This service shall be supported so a programming tool can determine the correct file(s) needed for programming.

4.2.6.5.2 *Request Message:*

Byte	Description	Hex Value
1	ReadDataByIdentifier Request Service Id	1A
2	Data Identifier (DID)	Xx

4.2.6.5.3 *Positive Response Message:*

Byte	Description	Hex Value
1	ReadDataByIdentifier Positive Response Service Id	5A
2	Data Identifier (DID)	Xx
3-n	DataRecord	Xx

© This document is the exclusive property of Robert Bosch GmbH. Without their consent it may not be reproduced or given to third parties.
If printed this is a uncontrolled document. The user must verify it is an authorized edition prior to use.

4.2.6.5.4 *Negative Response Code Conditions:*

Hex Value	Description
12	**SubFunctionNotSupported-InvalidFormat** This response code shall be sent if the request message does not have a DID number after the Request Service Id, or if additional data bytes are included beyond the DID byte.
22	**ConditionsNotCorrectOrRequestSequenceError** This response code shall be sent if the operating conditions of the EBCM are such that it cannot perform the required action (i.e the EBCM cannot access the eeprom or the eeprom is corrupted)
31	**RequestOutOfRange** This code shall be sent if the dataIdentifier value requested is not supported by the device. This code shall be sent if the dataIdentifier is secured and the ECU is not in an unlocked state.
78	**RequestCorrectlyReceived-ResponsePending** This response code shall be sent if reading the data from the address(es), which is referenced by the dataIdentifier, takes longer than P2C ms (e.g., the data to be read has to be retrieved from another processor via an ECU internal Serial Peripheral Interface (SPI) bus). This response code shall be sent if the ECU operating conditions are such that the request temporarily cannot be performed (e.g., the data to be retrieved cannot be read from EEPROM because another application task is currently writing to EEPROM).

4.2.6.6 Service $20 - ReturnToNormalMode

4.2.6.6.1 *Overview:*

The purpose of this service is to return a node or group of nodes to normal mode operation by canceling all active diagnostic services and resetting normal message communications (if they were interrupted by a diagnostic operation).
The following enhanced diagnostic services are terminated and/or reset by service $20:
- $10 InitiateDiagnosticOperation
- $27 SecurityAccess => the node shall become locked if the Manufacturers Enable Counter is $00
- $28 DisableNormalCommunication
- ・$A5 ProgrammingMode
- $AA ReadDataByPacketIdentifier periodic message scheduler logic is reset. However, the PIDs that have been built inside the DPID using service $2C will remain present.
- $AE DeviceControl is terminated, thereby returning full control of input(s)/output(s) to the node.
- Diagnostic (DVT) Mode or Device Control Mode.
- Any ECU resources allocated for the DataTransfer ($36) service which were a result of receiving a RequestDownload ($34) request, shall be re-allocated back to their original purpose.

If a request for this service is received during a programming session (activated via the $A5 service), the programming session shall be considered concluded and all devices receiving the request shall perform a software reset. In all other cases the controller shall NOT perform a reset when returning to normal communication mode.
A valid request for this service which concludes a programming event shall not be followed by a positive response.
Important Safety Note: If wheel speed is detected when Service $20 is received, the controller performance software (i.e. ABS, TCS, DRP) that was disabled due to receiving Service $27 sublevel $03 and $04 shall

© This document is the exclusive property of Robert Bosch GmbH. Without their consent it may not be reproduced or given to third parties.
If printed this is a uncontrolled document. The user must verify it is an authorized edition prior to use.

NOT be enabled until all wheel speeds are below actuation limit or lowest value possible from wheel speed sensors. The controller shall positively respond with Service $60 as normal.
For Test present timeouts, the control shall respond with an unsolicited Service $60 and shall NOT enable performance software when wheel speed is present. The performance software shall be enabled once all wheel speeds fall below the actuation limit or are at the lowest measurable value.
When the EBCM is in DeviceControl mode a speed monitoring is active and the controller performance software will be enabled as soon as the speed limit of 3 km/h is exceeded.
An ECU shall send an unsolicited service $20 positive response message any time a TesterPresent ($3E) timeout (P3C) occurs and a programming session is not active.

4.2.6.6.2 *Request Message Definition:*

Byte	Description	Hex Value
1	ReturnToNormalMode Request Service Id	20

4.2.6.6.3 *Positive Response Message:*

Byte	Description	Hex Value
1	ReturnToNormalMode Positive Response Service Id	60

4.2.6.6.4 *Negative Response Code Conditions:*

Hex Value	Description
12	**SubFunctionNotSupported-InvalidFormat** This code is returned if the request message format is incorrect (too many request message bytes).

4.2.6.7 Service $22 - ReadDataByParameterIdentifier

4.2.6.7.1 *Overview:*

The purpose of the ReadDataByParameterIdentifier service is to allow a tester access to ECU data by requesting one or multiple Parameter Identifier(s) (PID).
The length (number of data bytes in the response message for a given PID) and scaling of the response data (associated with a PID) is documented in the section labelled PID Requirements.
A maximum of 5 PIDs is supported in a single request.
If a tester requests multiple PIDs with a single request of this service, the ECU shall include data in a positive response for all of the PIDs that it supports. No data shall be included in a positive response for unsupported PIDs.

4.2.6.7.2 *Restrictions:*

If a sensor is broken with the communication still possible and the tester sends out a request to read the information from this sensor, the request will be positively answered with undefaulted values
If the condition of the sensor is such that the communication with it is not possible anymore, a default value of 0x00 for all bytes will be sent back to the tester.
If the content of a PID is read from the serial data and the information is considered as invalid, the information will still be sent back undefaulted to the tester.
If the content of a PID is read from the serial data and a timeout / data corruption does not allow reading the information, the last received value will be sent back to the tester.

© This document is the exclusive property of Robert Bosch GmbH. Without their consent it may not be reproduced or given to third parties.
If printed this is a uncontrolled document. The user must verify it is an authorized edition prior to use.

4.2.6.7.3 *Request Message:*

Byte	Description	Hex Value
1	ReadDataByParameterIdentifier Request Service Id	22
	ParameterIdentifier #1 = [	
2	Byte1 (MSB)	Xx
3	Byte2 (LSB)]	Xx
	ParameterIdentifer #2 = [	
4	Byte1 (MSB)	Xx
5	Byte2 (LSB)]	Xx
	ParameterIdentifer #3 = [	
6	Byte1 (MSB)	Xx
7	Byte2 (LSB)]	Xx
	ParameterIdentifer #4 = [	
8	Byte1 (MSB)	Xx
9	Byte2 (LSB)]	Xx
	ParameterIdentifer #5 = [	
10	Byte1 (MSB)	Xx
11	Byte2 (LSB)]	Xx

4.2.6.7.4 *Positive Response Message:*

Byte	Description	Hex Value
1	ReadDataByParameterIdentifier Positive Response Service Id	62
	ParameterIdentifer #1 = [	
2	Byte1 (MSB)	Xx
3	Byte2]	Xx
	DataRecord #1 = [	
4	Data #1	Xx
…	…	…
(k-1)+4	Data#k]	Xx
…	…	…
	ParameterIdentifer #5 = [	
n-(o-1)-2	Byte1 (MSB)	Xx
n-(o-1)-1	Byte2]	Xx
	DataRecord #5 = [	
n-(o-1)	Data #1	Xx
…	…	...
n	Data #o]	Xx

If a PID is requested but is not supported for the current configuration, the request will be positively answered and 0x00 will be sent back by default for all bytes of this PID

© This document is the exclusive property of Robert Bosch GmbH. Without their consent it may not be reproduced or given to third parties.
If printed this is a uncontrolled document. The user must verify it is an authorized edition prior to use.

4.2.6.7.5 *Negative Response Code Conditions:*

Hex Value	Description
12	**SubFunctionNotSupported-InvalidFormat** This response code shall be sent if the length of the request message is invalid. 1. The message_data_length is less than 3 (need at least one PID requested + SID). 2. The number of data bytes in the request exceeds 2 times the maximum number of PIDs allowed with a single request + 1. 3. The number of bytes in the request message after the SID is not an even number.
31	**RequestOutOfRange** A negative response with this response code shall be sent only if the request for this service was sent using the ECU Physical Request CAN Identifier and: 1. None of the PID(s) being requested is supported in the ECU. 2. All supported PID(s) being requested require security access and ECU security access has not been granted. If a request for this service is sent using the All Node Functional Request CANId (including a valid extended address) and either of the above conditions exist then there shall be no response sent.
78	**RequestCorrectlyReceived-ResponsePending** This response code shall be sent if retrieving the data associated with the requested PID and transmitting the final response on the bus takes longer than P2c ms (e.g., the data to be read has to be retrieved from another processor via an ECU internal SPI bus).

4.2.6.8 Service $23 - ReadMemoryByAddress

4.2.6.8.1 Overview

The purpose of this service is to directly retrieve data from the eeprom.
The data can be retrieved by entering the PDM id, a start byte (=offset value) and the desired length of the information that has to be found.
The ReadMemoryByAddress service is only available as a one shot request-response service.

4.2.6.8.2 Restrictions:

This service can only be accessed if the security access has been unlocked.
This restriction only applies when the MEC == 0x00.

4.2.6.8.3 Request message

4.2.6.8.3.1 Structure

Byte	Description	Hex Value
1	ReadMemoryByAddress Request Service Id	23
2 3	PDM Id in hexadecimal	Xx Xx
4	Offset value	Xx
5	Desired length of information	Xx

© This document is the exclusive property of Robert Bosch GmbH. Without their consent it may not be reproduced or given to third parties.
If printed this is a uncontrolled document. The user must verify it is an authorized edition prior to use.

4.2.6.8.3.2 List of available PDM Ids

227PDM Id	PDM Name	Size (Byte)
0x0002	EePlantEPSWNumbers	18
0x0003	EePlantBarcodeSinglePCPECU	29
0x0004	EePlantBarcodeECU	29
0x0005	EePlantPFKECU	10
0x0006	EePlantProductionDateECU	6
0x0007	EePlantProcessDataECU	20
0x000B	EePlantEOLCounter	2
0x0014	EePlantBarcodeHU	15
0x0015	EePlantProductionInfoHU	16
0x0016	EePlantTTNrHU	12
0x0017	EePlantProductionControlHU	20
0x0018	EePlantBarcodeFiveHU	5
0x012C	EvRsistCalData	10
0x0130	EEPlantGMSeedAndKeyLevelSps	4
0x0131	EEPlantGMSeedAndKeyLevelDevCtrl	4
0x0400	AgeingMeter	4
0x0401	RBFailureMemory	24x6 entries
0x0404	RAMSERstats	1
0x0405	HSW_TestReadWrite	1
0x0408	ReferenceRM	2
0x041A	VoltageCompTestFailCnt	1
0x0421	VlvVast_RestCounter	1
0x080A	TestCompleteSLC_58	58
0x084A	TestFailedSLC_22	22
0x0899	IgnitionCycleCounter	4
0x0BC0	FaultyMIDsPrevIC_8	16
0x0FA0	TtcFactor	8
0x0FA2	PsOffset_MC1	2
0x0FA4	PsOffset_Wheel	8
0x0FA5	AxsOffset	4
0x0FA6	AysOffset	2

© This document is the exclusive property of Robert Bosch GmbH. Without their consent it may not be reproduced or given to third parties.
If printed this is a uncontrolled document. The user must verify it is an authorized edition prior to use.

0x0FA7	SasOffset	2
0x0FA8	YrsOffset	2
0x0FA9	YrsSensitivity	2
0x0FAA	VolAccuMax	2
0x0FB4	TDisc	8
0x0FBA	Ltm_06	8x6 entries
0x0FC2	MAD_StoresValues	10
0x0FC4	ADRCounter	2
0x0FC5	SCMStart1SnapShot	8
0x0FC6	SCMStop1SnapShot	8
0x0FC7	SCMStart2SnapShot	8
0x0FC8	SCMStop2SnapShot	8
0x0FC9	SCMImpactCounter	2
0x0FCA	AvcPersistentState01	16
0x0FCC	VolAccuMax_BC2	2
0x0FD8	LtmThr_06	8x6 entries
0x2711	DFP	1
0x2713	RSCOTSN	10
0x2714	PD	4
0x2715	MEC	1
0x2716	EMPN	4
0x2717	BMPN	4
0x2719	ReqDownload4Boot	5
0x271A	DiagDataID	2
0x271D	BaseModPartNumAlCode	2
0x271F	GMLANID	6
0x2721	EndModelPartNumberAC	2
0x2723	ECUConfigA2	1
0x2726	GMManufacturingData	5
0x2728	XMLConfigCompatID	2
0x2729	XMLDataFilePartNum	4
0x272A	XMLDataFilePartNumAC	2
0x272B	XMLRSCOTSN	10
0x272C	XMLPD	4

© This document is the exclusive property of Robert Bosch GmbH. Without their consent it may not be reproduced or given to third parties.
If printed this is a uncontrolled document. The user must verify it is an authorized edition prior to use.

0x272D	PSRSCOTSN	20
0x272F	VTDImmobilizerId	2
0x2730	VTDEnvironmentId	2
0x2731	VTDSecCode	4
0x2732	VTDSecCodePrgCounter	1
0x2733	VTDSecCodeResCounter	1
0x2734	AssembyModeFlag	1
0x2735	VINPrgCounter	1
0x273D	ECUConfigA1	5
0x273E	ECUConfigA3	2
0x273F	FmhcFaultRec32	32x10 entries
0x2A42	DMC_StrCstmztnSttngsValueDrv1	1
0x2A43	DMC_StrCstmztnSttngsValueDrv2	1
0x2A44	DMC_StrCstmztnSttngsValueDrv3	1
0x2A45	DMC_SuspCstmztnSttngsValueDrv1	1
0x2A46	DMC_SuspCstmztnSttngsValueDrv2	1
0x2A47	DMC_SuspCstmztnSttngsValueDrv3	1
0x2A48	DMC_DrvInCstmztnSttngsValueDrv1	1
0x2A49	DMC_DrvInCstmztnSttngsValueDrv2	1
0x2A4A	DMC_DrvInCstmztnSttngsValueDrv3	1
0x2A4B	DMC_DispCstmztnSttngsValueDrv1	1
0x2A4C	DMC_DispCstmztnSttngsValueDrv2	1
0x2A4D	DMC_DispCstmztnSttngsValueDrv3	1
0x2A4E	DMC_SoundCstmztnSttngsValueDrv1	1
0x2A4F	DMC_SoundCstmztnSttngsValueDrv2	1
0x2A50	DMC_SoundCstmztnSttngsValueDrv3	1
0x2A51	DMC_ACCCstmztnSttngsValueDrv1	1
0x2A52	DMC_ACCCstmztnSttngsValueDrv2	1
0x2A53	DMC_ACCCstmztnSttngsValueDrv3	1
0x2A54	DMC_AdptnSeatCstmztnSttngsValueDrv1	1
0x2A55	DMC_AdptnSeatCstmztnSttngsValueDrv2	1
0x2A56	DMC_AdptnSeatCstmztnSttngsValueDrv3	1
0x2A57	DMC_AdptnPassSeatCstmztnSttngsValueDrv1	1
0x2A58	DMC_AdptnPassSeatCstmztnSttngsValueDrv2	1

© This document is the exclusive property of Robert Bosch GmbH. Without their consent it may not be reproduced or given to third parties.
If printed this is a uncontrolled document. The user must verify it is an authorized edition prior to use.

0x2A59	DMC_AdptnPassSeatCstmztnSttngsValueDrv3	1
0x2A5A	DMC_PowertrainCstmztnSttngsValue	1
0x2A5B	DMC_DrvStylThrshCstmztnSttngsValueDrv1	1
0x2A5C	DMC_DrvStylThrshCstmztnSttngsValueDrv2	1
0x2A5D	DMC_DrvStylThrshCstmztnSttngsValueDrv3	1
0X2B5F	VINData	17
0x2B67	VTDDelivreryCondition	1
0x2B68	SCLHS	5
0x2B69	SCLCE	5
0x2B6A	GMTV	5
0x2B6B	GMBC	4
0x2B6C	GMBenchVeriInfo	5
0x2B6D	DevelopmentSeedAndKeyLevelSps	5
0x2B6E	DevelopmentSeedAndKeyLevelDevCtrl	5
0x2B6F	CycleCounter	1
0xFF00	CustomerId	2
0xFF02	PdmEpswFinalized	1

Information about the different PDM Id available on demand.

4.2.6.8.3.3 Offset value

The offset value allows to choose from which byte the ECU has to start sending back the pdm data.
E.g.:
In order to read the complete VINData (PDM Id = 0x2B5F / lentgh: 17 = hex 0x11 Bytes) the tester has to send following request:
0x23 2B 5F 00 11
If only the last 5 bytes have to be shown the tester has to include an offset of 12 (=0x0C) in the request (17-12=5):
0x23 2B 5F 0C 05

4.2.6.8.3.4 Desired length of information

This parameter is used to choose to limit the amount of data that is sent back in the positive response.
E.g.:
In order to read the complete PSRSCOTSN (PDM Id = 0x272D / length: 20 = hex 0x14 Bytes) the tester has to send following request:
0x23 27 2D 00 14
If only the first 10 bytes have to be shown the tester has to modify the length to 10 (=0x0A) in the request
0x23 27 2D 00 0A

© This document is the exclusive property of Robert Bosch GmbH. Without their consent it may not be reproduced or given to third parties.
If printed this is a uncontrolled document. The user must verify it is an authorized edition prior to use.

4.2.6.8.4 Positive response message

Byte	Description	Hex Value
1	ReadMemoryByAddress Positive Response Service Id	63
2 3	Requested PDM Id in hexadecimal	Xx Xx
4 … n	PDM Data	Xx … Xx

4.2.6.8.5 *Negative Response Code Conditions:*

Hex Value	Description
12	**SubFunctionNotSupported-InvalidFormat** This code is returned if the request message length is not 5 bytes.
22	**ConditionsNotCorrectOrRequestSequenceError** This response code shall be sent if the access to the eeprom has been denied (e.g. eeprom corrupted)
31	**RequestOutOfRange** This code shall be sent if: - the MEC is equal to 0x00 and the security access has not be unlocked using service $27 (SPS level) - the PDM Id in the request is not valid - the desired length in the request is greater than the actual length of the PDM data - the desired length in the request is set to 0
78	**RequestCorrectlyReceived-ResponsePending** This response code shall be sent if reading the data from the eeprom takes longer than P2C ms. This response code shall be sent if the ECU operating conditions are such that the request temporarily cannot be performed (e.g., the data to be retrieved cannot be read from EEPROM because another application task is currently writing to EEPROM).

4.2.6.9 Service $27 - SecurityAccess

4.2.6.9.1 *Overview:*

This service is used by the Programming Tool to enable flash programming (Sublevel $01 and $02) and during DVT to enable DVT Mode (Sublevel $03 and $04).
A typical example of the use of this service is as follows:

- Tester requests the Seed.
- Node sends the Seed.
- Tester sends the Key (appropriate for the Seed received).
- Node responds that the Key was valid and that it will unlock itself.

The ECU shall support a development seed/key pair while the controller is for development.
The seed and key are each 16-bit numbers (2-byte).

The security seed and key shall be stored in non-volatile memory during the manufacturing process of the node.
The security seed shall be a random non-zero and non-$FFFF number. The security seed shall be generated for each individual part (all nodes with the same part number shall NOT have the same security key).

© This document is the exclusive property of Robert Bosch GmbH. Without their consent it may not be reproduced or given to third parties.
If printed this is a uncontrolled document. The user must verify it is an authorized edition prior to use.

If the EBCM replies to a Request Seed request (27 01 or 27 03) with a seed value $0000, it indicates that the ECU is already unlocked (MEC > 0).

Note:
The seed value $FFFF is not supported and will only occur if the nodes memory has been erased or the PDM Id containing the seed and key pair is corrupted.
In case a seed $FFFF is sent back any attempt to send a key to unlock the ECU will be rejected with NRC $35 (Invalid Key)
The security key shall be derived from the security seed using an external encryption algorithm. The security algorithm shall not reside in the node.
The seed and key security algorithm used by a development ECU is the one's complement algorithm (i.e., the key value = the one's complement of the seed).
The seed and key algorithm used for a production ECU shall be assigned by and obtained from the GM SPO Worldwide Service Programming group.
An invalid key requires the external tester to start over from the beginning with a Security Access "Request Seed" request.

If a tester makes two consecutive unsucessful attempts of SecurityAccess "Send Key" where the two key do not match, then the node shall insert a 10 s time delay before allowing further attempts. The 10 s timer shall be invoked for subsequent failed attempts.
A 10 s time delay shall be required before the node can positively respond to a Security Access "Request Seed" message from the tester after node power-on. This delay is only required if the MEC == 0 when powered on.

Attempts to access security shall not prevent normal vehicle communications or other diagnostic communication.
This service requires a TesterPresent ($3E) to be sent prior to a P3C timeout or the node shall lock itself (unless it was already unlocked when this service was first requested).
The Security Access is locked:
- in case of a S/W Reset
- as a default value when the ECU is powered up
- the speed limit of 3 km/h is exceeded while the EBCM is in Device Control

The Seed and Key pairs are stored in the eeprom.
There are 2 PDM Ids for development (1 for SPS and 1 for DEV) and 2 PDM Ids for production (1 for SPS and 1 for DEV)
A 5th byte is present for the development PDM Ids.
The SW will look at the development PDM Id first. If the 5th byte is equal to 0xAA the development Seed and Key pair will be used. If the 5th byte is not equal to 0xAA the production Seed and Key pair will be used.
ESP:
This service is supported on both busses.
If the security access has been unlocked on one bus, it will be unlocked on the second bus as well.

4.2.6.9.2 SPS

4.2.6.9.2.1 *Sub-function: SPS Request Seed ($01):*

This is the requestSeed level used for ECU programming via the SPS system.

4.2.6.9.2.1.1 Request Message Definition:

Byte	Description	Hex Value
1	SecurityAccess Request Service Id	27
2	Sub-function = SPS RequestSeed	01

© This document is the exclusive property of Robert Bosch GmbH. Without their consent it may not be reproduced or given to third parties.
If printed this is a uncontrolled document. The user must verify it is an authorized edition prior to use.

4.2.6.9.2.1.2 Positive Response Message:

Byte	Description	Hex Value
1	SecurityAccess Positive Response Service Id	67
2	Sub-function = SPS RequestSeed	01
3-4	SPS Security Seed (2 Byte, high-low)	Xx

4.2.6.9.2.2 *Sub-function: SPS Send Key ($02):*

This is the sendKey level used for ECU programming via the SPS system.

4.2.6.9.2.2.1 Request Message Definition:

Byte	Description	Hex Value
1	SecurityAccess Request Service Id	27
2	Sub-function = SPS SendKey	02
3-4	SPS Security Key (2 Byte, high-low)	Xx

4.2.6.9.2.2.2 Positive Response Message:

Byte	Description	Hex Value
1	SecurityAccess Positive Response Service Id	67
2	Sub-function = SPS SendKey	02

During development the SPS seed and key pair is 1234 EDCB.
During the production the SPS seed and key pair is generated using the $1F algorithm .key file.

4.2.6.9.3 DEV

When entering into DVT Mode, the limits that restrict the enabling of device control above some speed limit, i.e. 3 kph, are disabled.
In DVT mode, the controller shall disable all functionality which includes but not limited to ABS, TCS, TIMS, EBD (rear brake proportioning), and ETS (engine torque reduction). The controller shall exhibit normally operating hydraulic braking with no slip control being active when the brake pedal is applied.
While in DVT mode any DTC that will fail due to DVT interaction shall be disabled.

© This document is the exclusive property of Robert Bosch GmbH. Without their consent it may not be reproduced or given to third parties.
If printed this is a uncontrolled document. The user must verify it is an authorized edition prior to use.

Following DTCs will be disabled during DVT:

DTC Customer	Symptom	DTC Code (hex)	Description
C0035	18	0x403518	WSS_FL_Signal
C0035	5A	0x40355A	WSS_FL_Plaus
C0040	18	0x404018	WSS_FR_Signal
C0040	5A	0x40405A	WSS_FR_Plaus
C0045	18	0x404518	WSS_RL_Signal
C0045	5A	0x40455A	WSS_RL_Plaus
C0050	18	0x405018	WSS_RR_Signal
C0050	5A	0x40505A	WSS_RR_Plaus
C0161	5A	0x41615A	BLS_Plaus
C0186	5A	0x41865A	AYS_Plaus
C0196	5A	0x41965A	YRS_Plaus
C0287	5A	0x42875A	AXS_Plaus
C0035	0F	0x40350F	WSS_FL_Erratic
C0035	18	0x403518	WSS_FL_Signal
C0035	5A	0x40355A	WSS_FL_Plaus
C003A	3A	0x403A3A	WSS_GEN_FA
C003B	5A	0x403B5A	WSS_GEN_Plaus
C0040	0F	0x40400F	WSS_FR_Erratic
C0040	18	0x404018	WSS_FR_Signal
C0040	5A	0x40405A	WSS_FR_Plaus
C0045	0F	0x40450F	WSS_RL_Erratic
C0045	18	0x404518	WSS_RL_Signal
C0045	5A	0x40455A	WSS_RL_Plaus
C0050	0F	0x40500F	WSS_RR_Erratic
C0050	18	0x405018	WSS_RR_Signal
C0050	5A	0x40505A	WSS_RR_Plaus
C0055	3A	0x40553A	WSS_GEN_RA
C005A	0F	0x405A0F	WSS_GEN_Erratic
C005A	1F	0x405A1F	WSS_GEN_Intermittent
C0161	5A	0x41615A	BLS_Plaus
C0186	5A	0x41865A	AYS_Plaus
C0196	5A	0x41965A	YRS_Plaus
C0287	5A	0x42875A	AXS_Plaus
C0710	5A	0x47105A	SAS_Plaus

When entering DVT mode, the output control to the valve relays, pump motor relay and other outputs that are controlled during testing need to be disabled and respond to device control requests. The disabling of ALL outputs is not required. Brake lamp relay and others that need to operate as normal or are needed by other controllers shall not be disabled. Outputs to other controllers such as the torque request shall be defaulted to a valid value that represents normal operation.
In DVT mode, the vehicle needs to behave as if there are no ABS/TCS/VSES events are occurring.
Pump motor self tests shall be disabled during DVT mode.

4.2.6.9.3.1 *Sub-function: DEV Request Seed ($03):*

This is the requestSeed level for enabling vehicle manufacturing specific device control restrictions (as opposed to having service device control restrictions enabled).

© This document is the exclusive property of Robert Bosch GmbH. Without their consent it may not be reproduced or given to third parties.
If printed this is a uncontrolled document. The user must verify it is an authorized edition prior to use.

4.2.6.9.3.1.1 Request Message Definition:

Byte	Description	Hex Value
1	SecurityAccess Request Service Id	27
2	Sub-function = DEV RequestSeed	03

4.2.6.9.3.1.2 Positive Response Message:

Byte	Description	Hex Value
1	SecurityAccess Positive Response Service Id	67
2	Sub-function = DEV RequestSeed	03
3-4	DEV Security Seed (2 Byte, high-low)	Xx

4.2.6.9.3.2 *Sub-function: DEV Send Key ($04):*

This is the sendKey level for enabling vehicle manufacturing specific device control restrictions (as opposed to having service device control restrictions enabled).

4.2.6.9.3.2.1 Request Message Definition:

Byte	Description	Hex Value
1	SecurityAccess Request Service Id	27
2	Sub-function = DEV SendKey	04
3-4	DEV Security Key (2 Byte, high-low)	Xx

4.2.6.9.3.2.2 Positive Response Message:

Byte	Description	Hex Value
1	SecurityAccess Positive Response Service Id	67
2	Sub-function = DEV SendKey	04

During development the DevCtrl seed and key pair is 1234 EDCB.
During the production the DevCtrl seed and key pair is generated using the $1C algorithm .key file.

© This document is the exclusive property of Robert Bosch GmbH. Without their consent it may not be reproduced or given to third parties.
If printed this is a uncontrolled document. The user must verify it is an authorized edition prior to use.

4.2.6.9.4 *Negative Response Code Conditions:*

Hex Value	Description
12	**SubFunctionNotSupported-InvalidFormat** Send if the sub-function parameter in the request message is not supported Send if the length of the request message is incorrect for the requested sub-function.
22	**ConditionsNotCorrectOrRequestSequenceError** Send if the “sendKey” sub-parameter is received without first receiving a “requestSeed” request message. If the DeviceControl Restrictions of this service are supported, this code shall be returned if DeviceControl is already active and using the service device control restrictions at the time of the security request.
35	**InvalidKey** Send if the value of key is not valid for the node. Send in case a key is sent while the seed and key pair is corrupted.
36	**ExceededNumberOfAttempts** Send if too many attempts with invalid values are requested.
37	**RequiredTimeDelayNotExpired** Send if the delay timer is active and a request is transmitted.
78	**RequestCorrectlyReceived-ResponsePending** Send if it will take more than P2 ms to process the request.

4.2.6.10 Service $28 - DisableNormalCommunication

4.2.6.10.1 *Overview:*

The purpose of this service is to prevent a device from transmitting or receiving all messages which are not the direct result of a diagnostic request. The primary use of the service is to set up a programming event. When this service is activated, the node shall cease transmission of all normal mode (non-diagnostic) messages.
This service also disables the setting of all diagnostic trouble codes.
A request for this service disables the application SW so that there will be no active intervention of the EBCM on the vehicle.
The telltales related to the EBCM will be illuminated accordingly.
This service requires a periodic TesterPresent ($3E) service message to be transmitted by the tester to remain active.
This service shall be terminated when:

- ReturnToNormalOperation request is received
- P3C (Tester Present) timeout occurs
- Speed limit is reached

4.2.6.10.2 *Request Message Definition:*

Byte	Description	Hex Value
1	DisableNormalCommunication Request Service Id	28

4.2.6.10.3 *Positive Response Message:*

Byte	Description	Hex Value
1	DisableNormalCommunication Positive Response Service Id	68

© This document is the exclusive property of Robert Bosch GmbH. Without their consent it may not be reproduced or given to third parties.
If printed this is a uncontrolled document. The user must verify it is an authorized edition prior to use.

4.2.6.10.4 *Negative Response Code Conditions:*

Hex Value	Description
12	**SubFunctionNotSupported-InvalidFormat** Used when the request message contains more than the SID byte.
22	**ConditionsNotCorrectOrRequestSequenceError** This response code shall be sent if the vehicle speed is greater than 3km/h at the time where the request is received or once the communication has been disabled

4.2.6.11 Service $2C - DynamicallyDefineMessage

4.2.6.11.1 *Overview:*

This service is used to dynamically define the contents of diagnostic data packets which are formatted as UUDT messages and can be requested via the ReadDataByPacketIdentifier ($AA) service.

The use of dynamic data packets allows a test device to optimize its diagnostic routines and bus bandwidth utilization by packing messages to only contain the diagnostic signal/parameter information that is required for the current test.

It shall be possible to redefine a DPID while it is currently being scheduled by the periodic scheduler.

A dynamic data packet shall be capable of being initially defined or modified any time a node is capable of communications and shall only require a $2C service request to do so (i.e., no key cycles or any other special events can be required).

The periodic message scheduler shall be stopped and started without affecting the contents of any dynamic DPIDs.

Diagnostic data packets contain a one byte Data Packet Identifier (DPID #) and one to seven bytes of signal/parameter data.

Dynamically definable data packet Identifiers shall start with $FE and be numbered sequentially backwards.

No DPIDs are allowed to occupy the range of UUDT message numbers from $80 through $8F as these UUDT message numbers are reserved for the Diagnostic Trouble Code (DTC) services.

If a $3E (TesterPresent) time-out occurs, or upon receipt of a $20 service (ReturnToNormalMode) request message, the device shall retain the contents of all dynamic DPIDs.
In case of an ignition cycle of the SysPwrMd, the content of all dynamic DPIDs will be retained.
In ever the Common-Enable Line drops completely the content of all dynamic DPIDs will not be retained.

© This document is the exclusive property of Robert Bosch GmbH. Without their consent it may not be reproduced or given to third parties.
If printed this is a uncontrolled document. The user must verify it is an authorized edition prior to use.

4.2.6.11.2 *Request Message Definition:*

Byte	Description	Hex Value
1	DynamicallyDefineMessage Request Service Id	2C
2	DPID Identifier	Xx
	PID Data = [	
3	PIDHighByte_1	Xx
4	PIDLowByte_1	Xx
…	…	…
n-1	PIDHighByte_m	Xx
n	PIDLowByte_m]	Xx

4.2.6.11.3 *Positive Response Message:*

Byte	Description	Hex Value
1	DynamicallyDefineMessage Positive Response Service Id	6C
2	DPID Identifier	Xx

4.2.6.11.4 *Negative Response Code Conditions:*

Hex Value	Description
12	**SubFunctionNotSupported-InvalidFormat** The length of the request message is such that the request does not contain a DPID number and at least one PID. The length of the request message does not contain an even number of bytes (each PID is a 2-byte value so length must be an even number). If the total number of data bytes which would be reported in the UUDT message exceeds seven data bytes.
31	**RequestOutOfRange** A PID in the request message is not supported by the Node. The DPID# in the request message is either invalid or cannot be dynamically defined.

If a PID is not supported by the node because of the current variant configuration, the scheduling should still be possible and a default value of 0 will be sent when a request $AA is sent

4.2.6.12 Service $34 - RequestDownload

4.2.6.12.1 *Overview:*

This service is used in order to prepare a node to be programmed.

This service shall transfer program operation from the application software to the boot software so that the node can be programmed.

When entering the Bootloader Software a S/W reset is performed. This reset will reinitialise all the register and put the I/O back in their default state.

This Service is only supported on the HS-Bus as the flashing is only possible on the HS-Bus.

© This document is the exclusive property of Robert Bosch GmbH. Without their consent it may not be reproduced or given to third parties.
If printed this is a uncontrolled document. The user must verify it is an authorized edition prior to use.

4.2.6.12.2 *Request Message Definition:*

Byte	Description	Hex Value
1	RequestDownload Request Service Id	34
2	DataFormatIdentifier	Xx
3-6	UncompressedMemorySize (4 Byte, high-low)	Xx

4.2.6.12.3 *Positive Response Message on the CE-Bus:*

There is no positive response to Service $34 on theCE-Bus

4.2.6.12.4 *Negative Response Code Conditions on the CE-Bus:*

Hex Value	Description
11	**ServiceNotSupported** Used when the requested action will not be taken because the Service is not supported

4.2.6.12.5 *Positive Response Message on the HS-Bus:*

Byte	Description	Hex Value
1	RequestDownload Positive Response Service Id	74

4.2.6.12.6 *Negative Response Code Conditions on the HS-Bus:*

Hex Value	Description
12	**SubFunctionNotSupported-InvalidFormat** Used if the number of data bytes in the request message is incorrect. Used if the requested dataFormatIdentifier value is not supported by the node. Used if the unCompressedMemorySize is invalid for the dataFormatIdentifier requested.
22	**ConditionsNotCorrectOrRequestSequenceError** This return code shall be sent if the DisableNormalCommunication ($28) service is not active when a request is received for this service. This return code shall be sent if programming mode has not been activated via the ProgrammingMode ($A5) service when a request is received for this service. This return code shall be sent if the ECU is secure (for ECUs that support the SecurityAccess ($27) service) when a request for this service has been received. This return code shall be sent if an ECU receives a request for this service while in the process of receiving a download of a software or calibration module. This could occur if there is a data size mismatch between the ECU and the tester during the download of a module.
78	**RequestCorrectlyReceived-ResponsePending** Used when the node cannot process the request within P2c (100ms)

© This document is the exclusive property of Robert Bosch GmbH. Without their consent it may not be reproduced or given to third parties.
If printed this is a uncontrolled document. The user must verify it is an authorized edition prior to use.

4.2.6.13 Service $36 - TransferData

4.2.6.13.1 *Overview:*

This service is used to transfer and/or execute a block of data, usually for reprogramming purposes. This Service is only fully supported in the bootblock.

This Service is only supported on the HS-Bus as the flashing is only possible on the HS-Bus.

4.2.6.13.2 Restrictions:

This service is indirectly secured by the RequestDownload ($34) service. The RequestDownload ($34) service must be performed successfully before executing this service to prepare the targeted node to accept the TransferData message(s).

Once service $34 has been performed successfully, it shall be possible to carry out one or more TransferData service requests.
If a igntion cycle is performed after the positive response to service $34 and before requesting service $36, then the request for service $36 will be rejected with NRC $22.

Note: Successful completion of a RequestDownload ($34) request also requires that security must be unlocked (via SecurityAccess $27 service if applicable), that normal communications have been disabled (via DisableNormalCommunication $28 service) and that the ProgrammingMode ($A5) service has been activated. These services ($27, $28, and $A5) require the tester to send TesterPresent ($3E) requests at least once every P3c ms to keep them active.

4.2.6.13.3 *Request Message Definition:*

Byte	Description	Hex Value
1	TransferData Request Service Id	36
2	Sub-function = [Download DownloadAndExecuteOrExecute]	 00 80
3-6	StartingAddress (4 Byte, high-low)	Xx
7-n	DataRecord	Xx

4.2.6.13.4 *Positive Response Message:*

There is no positive response to this Service in the operational SW.

4.2.6.13.5 *Negative Response Code Conditions on the HS-Bus for the operational SW:*

Hex Value	Description
11	**ServiceNotSupported** Used when the requested action will not be taken because the Service is not supported

© This document is the exclusive property of Robert Bosch GmbH. Without their consent it may not be reproduced or given to third parties.
If printed this is a uncontrolled document. The user must verify it is an authorized edition prior to use.

4.2.6.13.6 *ABS: Negative Response Code Conditions for the operational SW:*

Hex Value	Description
22	**ConditionsNotCorrectOrRequestSequenceError** The RequestDownload ($34) service is not active when a request for this service is received.

4.2.6.14 Service $3B - WriteDataByIdentifier

4.2.6.14.1 *Overview:*

Write Data By Identifier Service (WDBID) shall be used to store identification data in the ECU non-volatile memory.

The ECU shall be responsible for knowing the address location and block length corresponding to the requested dataIdentifier.

It shall be possible for Nodes to restrict the tester's ability to write certain dataIdentifiers based on the security status of the node.

4.2.6.14.2 *Request Message Definition:*

Byte	Description	Hex Value
1	WriteDataByIdentifier Request Service Id	3B
2	DataIdentifier	Xx
3-n	DataRecord	Xx

4.2.6.14.3 *Positive Response Message:*

Byte	Description	Hex Value
1	WriteDataByIdentifier Positive Response Service Id	7B
2	DataIdentifier	Xx

© This document is the exclusive property of Robert Bosch GmbH. Without their consent it may not be reproduced or given to third parties.
If printed this is a uncontrolled document. The user must verify it is an authorized edition prior to use.

4.2.6.14.4 *Negative Response Code Conditions:*

Hex Value	Description
12	**SubFunctionNotSupported-InvalidFormat** This response code shall be sent if the length of the data in the request message does not match the size expected by the node.
22	**ConditionsNotCorrectOrRequestSequenceError** This response code shall be sent if the operating conditions of the ECU are such that it cannot perform the required action (e.g., the data for a DID is stored in EEPROM and an EEPROM failure has occured). This response code is not intended to be used if the ECU conditions are such that the request temporarily cannot be performed (e.g., the data temporarily cannot be written to EEPROM because another application task is currently writing to EEPROM). Response code $78 is used when conditions are temporarily not met. If this response code is supported by a node, the reason(s) to generate this return code must be documented in the Component Technical Specification (CTS).
31	**RequestOutOfRange** This response code shall be sent if: The dataIdentifier in the request message is not supported in the node or the dataIdentifier is supported for read only purposes (via service $1A). The dataIdentifier, which references a specific address, is secured and the ECU is not in an unlocked state. Any data transmitted in the dataRecord of the request message is invalid (if applicable to the node).
78	**RequestCorrectlyReceived-ResponsePending** This response code shall be sent if writing the data to the address(es), which are referenced by the dataIdentifier, takes longer than P2C ms. (e.g., the block of data sent is large enough that writing of the data to EEPROM cannot be completed within P2C). This response code shall be sent if the ECU operating conditions are such that the request temporarily cannot be performed (e.g., the data temporarily cannot be written to EEPROM because another application task is currently writing to EEPROM).

4.2.6.15 Service $3E - TesterPresent

4.2.6.15.1 *Overview:*

This service is used to indicate to a node (or nodes) that a tester is still connected to the vehicle and that certain diagnostic services that have been previously activated are to remain active.
This service keeps other diagnostic services active by resetting the diagnostic timer (TesterPresent _Timer) each time a request for this service is received.
The diagnostic timer is not active when the system is powered up.
The diagnostic timer is reset when the system is powered down.
Following diagnostic services will activate the TesterPresent_Timer:

- • $10 Initiate Diagnostic Operation - Subfunction 03 enable DTC During Dev Cntrl
- • $27 Security Access
- • $28 Disable Normal Communication
- • $AA Read Data By Packet Identifier
- • $AE Device Control

When a P3C timeout occurs, the node shall execute the same logic that would be executed if a ReturnToNormalMode ($20) service request was received. This includes the transmission of a ReturnToNormalMode positive response message.

© This document is the exclusive property of Robert Bosch GmbH. Without their consent it may not be reproduced or given to third parties.
If printed this is a uncontrolled document. The user must verify it is an authorized edition prior to use.

The unsolicited service $20 positive response is only sent if programming mode was not active prior to the TesterPresent timeout. See service $A5 for more information on programming mode.
Receiving a TesterPresent request message shall not put a node into a diagnostic mode (i.e., the TesterPresent timer shall not be activated by this message)

4.2.6.15.2 *Request Message Definition:*

Byte	Description	Hex Value
1	TesterPresent Request Service Id	3E

This Service can be addressed physically or functionally.

4.2.6.15.3 *Positive Response Message:*

Byte	Description	Hex Value
1	TesterPresent Positive Response Service Id	7E

The TesterPresent positive response message shall only be sent if the request message was physically addressed.

4.2.6.15.4 *Negative Response Code Conditions:*

Hex Value	Description
12	**SubFunctionNotSupported-InvalidFormat** If the length of the request message is invalid.

4.2.6.16 Service $A2 - ReportProgrammedState

4.2.6.16.1 *Overview:*

The ReportProgrammedState is used by the tester to determine:
- Which nodes on the link are programmable
- The current programmed state of each programmable node

This service is supported on the HS-bus as there is only one bus

4.2.6.16.2 *Request Message Definition:*

Byte	Description	Hex Value
1	ReportProgrammedState Request Service Id	A2

4.2.6.16.3 *Positive Response Message on the HS-Bus for ESP:*

There is no positive response to Service $A2 on the HS-Bus

4.2.6.16.4 *Negative Response Code Conditions on theCE-Bus for ESP:*

Hex Value	Description
11	**ServiceNotSupported** Used when the requested action will not be taken because the Service is not supported

© This document is the exclusive property of Robert Bosch GmbH. Without their consent it may not be reproduced or given to third parties.
If printed this is a uncontrolled document. The user must verify it is an authorized edition prior to use.

4.2.6.16.5 *Positive Response Message for ABS and on the HS-Bus for ESP:*

Byte	Description	Hex Value
1	ReportProgrammedState Positive Response Service Id	E2
2	ProgrammedState* = [Fully programmed s/w present, default or no start cal present]	 00 03

***Note:** ths table represents the status supported in the operational SW. Status 0x01 and 0x02 are only supported in the Bootblock

A type A ECU has its programming state set to 00.
If the failureword VarCodeValueNotPlausible is present the node will be considered in state 03.

4.2.6.16.6 *Negative Response Code Conditions for ABS and on the HS-Bus for ESP:*

Hex Value	Description
12	**SubFunctionNotSupported-InvalidFormat** Used when the request message contains more than the SID byte.

4.2.6.17 Service $A5 - ProgrammingMode

4.2.6.17.1 *Overview:*

The Programming Mode Service (PM) is used to prepare and switch the ECU to programming mode.
Once programming mode has been enabled, the tester must send a TesterPresent (mode $3E) message to all nodes (and any sub-nets as required by the programming event) at least once every P3C ms to keep this mode active.
The programming mode is disabled when the system is powered down.

4.2.6.17.2 Sub-function: RequestProgrammingMode ($01):

This level verifies that all criteria are met to enable the programming services for all receiving nodes.

4.2.6.17.2.1 *Request Message Definition:*

Byte	Description	Hex Value
1	ProgrammingMode Request Service Id	A5
2	Sub-function = RequestProgrammingMode	 01

4.2.6.17.2.2 *Positive Response Message:*

Byte	Description	Hex Value
1	ProgrammingMode Positive Response Service Id	E5

4.2.6.17.3 Sub-function: EnableProgrammingMode ($03):

This level enables the programming services of the node.

© This document is the exclusive property of Robert Bosch GmbH. Without their consent it may not be reproduced or given to third parties.
If printed this is a uncontrolled document. The user must verify it is an authorized edition prior to use.

4.2.6.17.3.1 Request Message Definition:

Byte	Description	Hex Value
1	ProgrammingMode Request Service Id	A5
2	Sub-function = EnableProgrammingMode	03

4.2.6.17.3.2 Positive Response Message:

There is no response message sent in response to an EnableProgrammingMode request (03H).

4.2.6.17.4 *Negative Response Code Conditions:*

Hex Value	Description
12	**SubFunctionNotSupported-InvalidFormat** This return code shall occur if the sub-parameter is not valid and programming mode is not already active (if programming mode is active at the time of a request, the $22 response is sent. See item 4 in the response code $22 section of this table). This return code shall occur if the length of the requested message is incorrect.
22	**ConditionsNotCorrectorRequestSequenceError** 1. This return code shall occur if the initiate programming request (sub-parameter = $01 or $02) is not requested prior to the “enableProgrammingMode” (sub-parameter = $03) request. 2. This return code shall occur if the $28 service is not active. 3. This return code shall occur if operating conditions are such that the node must not allow a programming event to begin. Reasons for not allowing a programming event to begin must be documented in a CTS, SSTS, or a supplemental diagnostic specification referenced by the CTS or SSTS. 4. This return code shall occur if programming mode is already active when a request for this service is received.

4.2.6.18 Service $A9 - ReadDiagnosticInformation

4.2.6.18.1 *Overview:*

This service allows a tester to read the status of node-resident Diagnostic Trouble Code (DTC) information from any controller, or group of controllers within a vehicle.
This service allows the tester to do the following:
1. Retrieve the status of a specific DTC and FaultType combination (subfunction $80)

2. Retrieve the list of DTCs that match a tester defined DTC status mask (subfunction $81)

4.2.6.18.2 Restrictions

When a request for this service is received on one bus, while the DTCs are being cleared on the second bus (service $04), the positive response will be postponed by sending NRC $78 *response pending*.

4.2.6.18.3 *Sub-function: ReadStatusOfDTCByDTCNumber ($80):*

With this level a tester can retrieve the status of a specific DTC and DTCFailureTypeByte (symptom) combination.

© This document is the exclusive property of Robert Bosch GmbH. Without their consent it may not be reproduced or given to third parties.
If printed this is a uncontrolled document. The user must verify it is an authorized edition prior to use.

4.2.6.18.3.1 Request Message Definition:

Byte	Description	Hex Value
1	ReadDiagnosticInformation Request Service Id	A9
2	Sub-function = ReadStatusOfDTCByDTCNumber	80
3 4 5	DTCMaskRecord = [DTCHighByte DTCLowByte DTCFailureTypeByte]	Xx Xx Xx

4.2.6.18.3.2 UUDT Positive Response Message:

Byte	Description	Hex Value
1	MessageNumber = [ReadStatusofDTCByDTCNumber]	80
2 3 4 5	DTCFailureTypeStatusRecord = [DTCHighByte DTCLowByte DTCFailureTypeByte DTCStatusByte]	Xx Xx Xx Xx

4.2.6.18.4 *Sub-function: ReadStatusOfDTCByStatusMask ($81):*

With this level a tester can retrieve a list of DTC numbers and DTCFailureTypes which satisfy a tester defined status mask.

Nodes shall be able to mask on more than one bit of the status byte field at a time via a logical OR-ing operation.
If a tester specifies a status mask that contains bits that the node does not support, then the node shall process the DTC information using only the bits that it does support.
The ECU should have the capability to report the status of all supported DTC / failure type combinations in response to a Service $A9 $Level $81 request (e.g., all supported DTC / Failure Type combinations with a status of current set simultaneously).

4.2.6.18.4.1 Request Message Definition:

Byte	Description	Hex Value
1	ReadDiagnosticInformation Request Service Id	A9
2	Sub-function = ReadStatusofDTCByStatusMask	81
3	DTCMaskRecord = [DTCStatusMask]	Xx

© This document is the exclusive property of Robert Bosch GmbH. Without their consent it may not be reproduced or given to third parties.
If printed this is a uncontrolled document. The user must verify it is an authorized edition prior to use.

4.2.6.18.4.2 DTC Status Mask Definition:

Bit	Definition
7	Warning Indicator Requested State
6	Current DTC Since Power Up
5	Test Not Passed Since Current Power Up
4	History DTC
3	Test Failed Since DTC Cleared
2	Test Not Passed Since DTC Cleared
1	Current DTC
0	DTC Supported By Calibration

Refer to chapter about the Diagnostic Trouble Code (DTC) for a complete description of the DTC Status Byte.

4.2.6.18.4.3 UUDT Positive Response Message:

The following UUDT response is sent for each DTC that satisfies the tester defined masking criteria:

Byte	Description	Hex Value
1	MessageNumber = [ReadStatusofDTCByStatusMask]	81
2 3 4 5	DTCFailureTypeStatusRecord = [DTCHighByte DTCLowByte DTCFailureTypeByte DTCStatusByte]	Xx Xx Xx Xx

The following UUDT endOfDTCReport message shall be sent after all ($81) UUDT messages containing DTC information have been returned to the tester. If no ($81) UUDT messages containing DTC information are sent (because the ECU determined that no DTCs matched the tester-specified masking criteria), the endOfDTCReport message shall still be sent.

Byte	Description	Hex Value
1	MessageNumber = [ReadStatusofDTCByStatusMask]	81
2 3 4 5	EndOfDTCReport = [EndOfDTCReportHighByte EndOfDTCReportMidlleByte EndOfDTCReportLowByte DTCStatusAvailabilityMask]	00 00 00 FF

© This document is the exclusive property of Robert Bosch GmbH. Without their consent it may not be reproduced or given to third parties.
If printed this is a uncontrolled document. The user must verify it is an authorized edition prior to use.

4.2.6.18.5 *Negative Response Code Conditions:*

Hex Value	Description
12	**SubFunctionNotSupported-InvalidFormat** This code is returned if: 1. the request message length is incorrect 2. the requested sub-function is not locally supported.
31	**RequestOutOfRange** This response code is returned if the DTC and FaultType combination requested with sub-function $80 is not supported by the ECU.
78	**RequestCorrectlyReceived-ResponsePending** This code may be returned if: - the DTC information is being written at the time of the request (depending on memory architecture). - the ECU cannot process the request message and send the first (or only) UUDT positive response within the P2C timing requirements - the failure memory is being cleared on the second bus at the time where the request was received (only applies for ESC project)

4.2.6.19 Service $AA - ReadDataByPacketIdentifier

4.2.6.19.1 *Overview:*

The purpose of the ReadDataByPacketIdentifier($AA) service is to allow a tester to request data packets that contain diagnostic information (e.g., sensor input or output values) which are packaged in a UUDT diagnostic message format. The DPIDs requested via this service can be sent as a one-time response or scheduled periodically.
The ECU shall support dynamic DPIDs only.
The following 8 dynamic DPIDs are supported: FE, FD, FC, FB, FA,F9, F8, F7

4.2.6.19.2 Sub-fucntion: StopSending ($00):

With this level a tester can stop the periodic transmission of all or certain scheduled DPIDs.
When a stopSending request is received without any DPIDs after the sub-function parameter, the ECU shall stop the periodic transmission of all DPIDs (stop the PDS) and the entire PDS shall be cleared.
When a stopSending request is received with one or more DPID(s) after the sub-function parameter, then all DPID(s) in the PDS that match a DPID number in the request shall be stopped.

The ECU shall be able to support in a single stopSending DPID request, as many DPIDs as there are items in the PDS.
A stopped DPID shall not be transmitted after the UUDT positive response with message number $00 has been sent.

4.2.6.19.2.1 Request Message Definition:

Byte	Description	Hex Value
1	ReadDataByPacketIdentifier Request Service Id	AA
2	Sub-function = StopSending	00
3	DPIDs[] = [DPID#1	Xx
:	:	:
n	DPID#m]	Xx

© This document is the exclusive property of Robert Bosch GmbH. Without their consent it may not be reproduced or given to third parties.
If printed this is a uncontrolled document. The user must verify it is an authorized edition prior to use.

4.2.6.19.2.2 UUDT Positive Response Message:

Byte	Description	Hex Value
1	MessageNumber = [stopSendingPositiveResponse]	00

4.2.6.19.3 Sub-function: SendOneResponse ($01):

With this level a tester can request one-shot respone message(s) (i.e. one UUDT response for each DPID requested).
The ECU supports a maximum of 7 DPIDs in a SendOneResponse request.
The ECU is only required to handle a single sendOneResponse DPID request at a time.
The ECU shall support a sendOneResponse DPID request while the periodic scheduler is active.

4.2.6.19.3.1 Request Message Definition:

Byte	Description	Hex Value
1	ReadDataByPacketIdentifier Request Service Id	AA
2	Sub-function = SendOneResponse	01
3	DPIDs[] = [DPID#1	Xx
:	:	:
n	DPID#n]	Xx

4.2.6.19.3.2 UUDT Positive Response Message:

Byte	Description	Hex Value
1	MessageNumber = [DPID#]	Xx
2-8	DataRecord	Xx

If no PID has been defined in the DPID using service $2C, then the positive response will have all bytes set to 0x00.

4.2.6.19.4 Sub-functions: SendAtPeriodicRate ($02), ($03), ($04):

With these levels a tester can request to schedule DPID(s) at a slow, medium or fast rate.
The ECU supports a maximum of 5 DPIDs that can be scheduled simultaneously by the PDS (Periodic DPID Scheduler).
Each DPID in the PDS shall be capable of being scheduled at one of the allowable periodic rates independent of the rate applied to the other DPIDs in the PDS.
The ECU shall be able to support in a single periodic DPID request, as many DPIDs as there are items in the PDS.
The supported scheduling rates are provided below:

- **Slow** : 1000 ms
- **Medium** : 300 ms
- **Fast** : 30 ms

Multiple copies of the same DPID are not allowed in the PDS (i.e., if the ECU receives a request to schedule a DPID already present in the PDS, only the scheduling rate will be updated).
It shall be possible to request additional DPIDs to be scheduled at any allowed rate while the periodic scheduler is active provided that the request does not attempt to place more DPIDs in the PDS then the PDS supports.

© This document is the exclusive property of Robert Bosch GmbH. Without their consent it may not be reproduced or given to third parties.
If printed this is a uncontrolled document. The user must verify it is an authorized edition prior to use.

It shall also be possible to request scheduling DPIDs while a sendOneResponse DPID request is in progress provided that the initial UUDT DPID response to the sendOneResponse DPID request has been received.
It shall be possible to redefine the rate of one or several DPID(s) while periodic transmission is active.
The Node shall allow redefinition of any/all dynamic DPID(s) (via the $2C service) while periodic transmission is active.
Once the test device receives a positive response from a $2C request, the PIDs in each subsequent transmission of the corresponding UUDT message (as requested via service $AA) shall match those of the last $2C service request message.
Periodic rates require a TesterPresent ($3E) message to be sent on the bus to keep the Periodic DPID Scheduler (PDS) active.
When a P3C (TesterPresent) time-out occurs, the entire PDS shall be cleared and no UUDT response shall be sent on this action.
The tester is allowed to send a new diagnostic request after receiving a negative response that contains a request service Id of $AA and a negative response code $78 (RequestCorrectlyReceived-ResponsePending) because no further USDT response (either positive or negative) shall follow.
The ECU is only allowed to transmit a single negative response with response code $78 to a periodic request for this service.

4.2.6.19.4.1 Request Message Definition:

Byte	Description	Hex Value
1	ReadDataByPacketIdentifier Request Service Id	AA
2	Sub-function = [SendAtSlowRate SendAtMiddleRate SendAtFastRate]	 02 03 04
3	DPIDs[] = [DPID#1	Xx
:	:	:
n	DPID#m]	Xx

4.2.6.19.4.2 UUDT Positive Response Message:

Byte	Description	Hex Value
1	MessageNumber = [DPID#]	 Xx
2-8	DataRecord	Xx

If no PID has been defined in the DPID using service $2C, then the positive response will have all bytes set to 0x00.

© This document is the exclusive property of Robert Bosch GmbH. Without their consent it may not be reproduced or given to third parties.
If printed this is a uncontrolled document. The user must verify it is an authorized edition prior to use.

4.2.6.19.5 *Negative Response Code Conditions:*

Hex Value	Description
12	**SubFunctionNotSupported-InvalidFormat** This response code shall be sent if: Message length of the request is invalid (less than two bytes). Requested sub-function parameter is invalid (not defined or not supported). $sub-function parameter = [$01 to $04] and Message length < 3. The number of DPIDs in a sub-function parameter $01 request exceeds the maximum number of DPIDs supported for one-shot. The number of DPIDs in a sub-function parameter $00, $02, $03 or $04 request exceed the maximum number of DPIDs that can be scheduled simultaneously in the PDS. Refer to pseudo code.
31	**RequestOutOfRange** This response code shall be sent if: Any DPID in the request is invalid (reserved or not defined). This check is not required for sub-function parameter $00. Checks for valid DPIDs are performed after the checks for message format and sub-function level.
81	**Scheduler Full** This response code shall be sent if: The PDS would overflow if the request was processed (not enough vacant items in PDS to process request).

4.2.6.20 Service $AE - DeviceControl

4.2.6.20.1 *Overview:*

The purpose of this service is to allow a test device to override normal output control functions in order to verify proper operation of a component or system, or to reset/clear variables used within normal control algorithms. The tool may take control of multiple outputs simultaneously with a single request message or by sending multiple device control service messages.

When a CPID is defined with multiple output controls, the ECU shall support simultaneous control of multiple outputs contained in that CPID as part of a single diagnostic request.

The receipt of a second device control request with a different CPID number than that of a previous request, shall not result in any change to the functions requested with the previous device control request.

The DeviceControl service shall be given the highest priority in the devices output control logic unless control of the given output could result in vehicle damage, or there is potential risk to the vehicles occupants.
The DeviceControlLimitsExceeded reject message may be sent in response to a DeviceControl request message or as an unsolicited response any time the application software detects that a limit has been exceeded.

The ECU shall support reactivation of device controls (provided that the additional requests do not result in restrictions being exceeded) after a device control restriction has been exceeded without requiring extraordinary measures such as a key cycle or cycling of power.
Upon receiving a DeviceControl request message, an ECU shall normally inhibit the setting of Diagnostic

Trouble Codes (excluding DTCs associated to protecting the system outputs).
If a DTC was present before entering the Device Control, it should remain visible with SID $A9 after the Device Control has been entered.

© This document is the exclusive property of Robert Bosch GmbH. Without their consent it may not be reproduced or given to third parties.
If printed this is a uncontrolled document. The user must verify it is an authorized edition prior to use.

Once DTCs are inhibited, they will remain inhibited until a TesterPresent ($3E) timeout occurs or until a ReturnToNormalMode ($20) service request is received.
If a given device control is in more than one CPID, the actions requested by the last message containing that device control shall remain active.

All device controls shall be terminated if any of the following occur:
- A TesterPresent (P3C) time-out occurs.
- A device control request is received with a CPID number of $00.
- A device control limit is exceeded on any active device control.
- A ReturnToNormalMode($20) request message is received.
- The device is powered down.

An individual device control can be terminated in the following manner:
- A device control request is received with the same CPID number and the enabling criteria turned off.
- Any of the criteria (listed above) to cancel all device controls are met.

This service shall be allowed while other diagnostic services are also active.
If data is requested which includes the state of a node's outputs while those outputs are under device control, the data representing the output state shall reflect its commanded state.
While the controller is in device control mode (controller received a device control request), the performance software associated with the output being controlled shall be disabled. In most cases, all performance (slip control) software shall be disabled except for performance (slip control) software required for normal boosted or non-boosted braking.

4.2.6.20.2 Restrictions

This Service cannot be accessed in parallel on both busses.
If a request for this Service is received on one bus while the DeviceControl had already been entered on a second bus, then the request will be rejected with NRC $E3 50 05 *System Currently Active*.

The system is considered active when a request for following CPIDs has been sent:
- CPID $12 *Repair Bleed Routine*
- CPID $14 *Static Test*
- CPID $15 *Lamp Activation*

The system is also considered as active in case of an active ABS/ESP/TCS intervention.
While the system is active a request for following CPIDs will be rejected with NRC $E3 50 05 *System Currently Active*:
- CPID $01 *ABS/TCS/VSES Modulator Valves and Pumps Control*
- CPID $02 *ABS/TCS/VSES Configuration Controls and VES Control*
- CPID $04 *Valve Multi-State Control*
- CPID $12 *Repair Bleed Routine*
- CPID $14 *Static Test*
- CPID $15 *Lamp Activation*

4.2.6.20.3 *Request Message Definition:*

Byte	Description	Hex Value
1	DeviceControl Request Service Id	AE
2	CPID Number	Xx
3-7	CPID Control Bytes	Xx

© This document is the exclusive property of Robert Bosch GmbH. Without their consent it may not be reproduced or given to third parties.
If printed this is a uncontrolled document. The user must verify it is an authorized edition prior to use.

4.2.6.20.4 *Positive Response Message:*

Byte	Description	Hex Value
1	DeviceControl Positive Response Service Id	EE
2	CPID Number	Xx

4.2.6.20.5 *Negative Response Code Conditions:*

Hex Value	Description
12	**SubFunctionNotSupported-InvalidFormat** The length of the message is such that there is no CPID number in the request. The length of the message for a supported CPID does not match the length expected by the device.
31	**RequestOutOfRange** This code shall be returned if the CPID requested is not supported by the device. This code shall be returned if a tester sends a request with a valid secure CPID and the device's security feature is currently active.
78	**RequestCorrectlyReceived-ResponsePending**
E3	**DeviceControlLimitsExceeded** This code shall be returned any time a device exits device control due to its internal protection algorithms. With this code, 2 additional bytes will be included in the reject message to indicate which limit was exceeded.

© This document is the exclusive property of Robert Bosch GmbH. Without their consent it may not be reproduced or given to third parties.
If printed this is a uncontrolled document. The user must verify it is an authorized edition prior to use.

4.2.7 DID Requirements

4.2.7.1 List of Supported DIDs

DID	Hex Value
Bosch BB Number (BBBN)	03
TCM Software Version Number (TCMSVN)	05
HW Build Option (HWBO)	07
Tire Size/Tone Ring	30
Disable Flash Protection (DFP)	40
Programming Counter (PC)	41
Vehicle Identification Number (VIN)	90
System Supplier Id (SYSSUPPID)	92
Repair Shop Code Or Tester Serial Number (RSCOTSN)	98
Programming Date (PD)	99
Diagnostic Data Identifier (DDI)	9A
XML Configuration Compatibility Identifier (XMLCCID)	9B
Previous Stored Repair Shop Code Or Tester Serial Number (PSRSCOTSN)	9F
Manufacturers Enable Counter (MEC)	A0
ECU Configuration or Customization Data 1 (ECUCOCGD1)	A1
XML Repair Shop Code Or Tester Serial Number (XMLRSCOTSN)	A9
XML Programming Date (XMLPD)	AA
Compressed Vehicle Partitioning and Product Structure (CVPPS)	AB
ECU Diagnostic Address (ECUADDR)	B0
GM Manufacturing Data (GMMD)	B2
Manufacturing Traceability Characters (MTC)	B4
GM Broadcast Code (GMBC)	B5
GM Software Usage Description (GMSUD)	B7
GM Bench Verification Information (GMBVI)	B8
Boot Software Part Number (BSPN)	C0
Software Module Identifier (SWMI1)	C1
Software Module Identifier (SWMI2)	C2
End Model Part Number (EMPN)	CB
Base Model Part Number (BMPN)	CC
Boot Software Part Number Alpha Code (BSPNAC)	D0
Software Module Identifier Alpha Code 1 (SWMIAC1)	D1
Software Module Identifier Alpha Code 2 (SWMIAC2)	D2
End Model Part Number Alpha Code (EMPNAC)	DB
Base Model Part Number Alpha Code (BMPNAC)	DC
GMLAN Identification Data (GMLANID)	DE

4.2.7.2 Explanation on DID format

DID $xx = SID: Name of DID (Abbreviation)				Read/Write	Bus
Byte	Bit	Name	Conversion		
1-a		Name of Byte 1 to a	(Format, size)		
b-c		Name of Byte b to c	(Format, size)		

© This document is the exclusive property of Robert Bosch GmbH. Without their consent it may not be reproduced or given to third parties.
If printed this is a uncontrolled document. The user must verify it is an authorized edition prior to use.

Read/Write: R = DID can be read using Service $1A
W= DID can be written using Service $3B
R/W = DID can be read and written
W*= DID can be written using Service $3B but requires security to be unlocked
Bus: HS = DID supported on the High Speed Bus only
CE = DID supported on the Chassis Expansion Bus only
HS/CE = DID supported on both busses

4.2.7.3 DID $03: Bosch BB Number (BBBN)

DID $03: Bosch BB Number (BBBN)			R	HS/CE
Byte	Bit	Name	Conversion	
0-4		Tk_WinX BB Number	(USN, 5 Bytes)	

Default value:
ABS: 90814 (0x09 0x00 0x08 0x01 0x04)
ESP: 90800 (0x09 0x00 0x08 0x00 0x00)

4.2.7.4 DID $05: TCM Software Version Number (TCMSVN)

DID $05: TCM Software Version Number (TCMSVN)			R	HS/CE
Byte	Bit	Name	Conversion	
0-1		Customer Baseline	(USN, 2 Byte)	
2-10		Tk_WinX CSW Revision	(USN, 9 Bytes)	

The first 2 bytes represent the baseline number as mentioned to the customer at the time of the release.
The 9 following bytes represent the SW version as described in TCM and can have up to 4 branch versions (e.g SW version 6.5.2.3).
This information is taken from TK_WinX.
E.g:
Baseline 9 was delivered to the customer with an internal TCM SW version 9.1.0.1.
DID $05 will be 09 009010001
0x00 0x09 0x00 0x00 0x09 0x00 0x01 0x00 0x00 0x00 0x01
Default value:
BL 06 with TCM SW version 6.0
06 006000000
0x00 0x06 0x00 0x00 0x06 0x00 0x00 0x00 0x00 0x00 0x00

4.2.7.5 DID $07 HW Build Option (HWBO)

DID $07: HW Build Option			R	HS/CE
Byte	Bit	Name	Conversion	
0-2		HW Build option	(ASCII, 3 Bytes)	

This DID is used to identify the Bosch build option.
This DID is used to identify if the HW allows measurement or not.
1st character:
- P: Platform SW
- X: XPASS SW
- C: Complete SW
- E: ePSW

2nd character:
- C: ECU

© This document is the exclusive property of Robert Bosch GmbH. Without their consent it may not be reproduced or given to third parties.
If printed this is a uncontrolled document. The user must verify it is an authorized edition prior to use.

3rd character:
HW Variant ranging from A to E
e.g.: Build CCE => ASCII 0x43 0x43 0x45
Complete SW ECU Variant E
ESP: Default value:
- CCD (0x43 0x43 0x44) for ECU without XCP measurement.
- CCE (0x43 0x43 0x45) for ECU with XCP measurement.
ABS: Default value:
- CCB (0x43 0x43 0x42) for ECU without XCP measurement.
- CCA (0x43 0x43 0x41) for ECU with XCP measurement.

4.2.7.6 DID $30: Tire Size/Tone Ring:

DID $30: Tire Size/Tone Ring				R	HS/CE
Byte	Bit		Name	Conversion	
0-1			Front Tire Size (Rev/Kilometer)	(USN, 2 Bytes)	
2-3			Rear Tire Size (Rev/Kilometer)	(USN, 2 Bytes)	
4			Tone Ring (number of teeth)	(USN, 1 Byte)	

Default value:
All Bytes set to 0x00

4.2.7.7 DID $40: Disable Flash Protection (DFP):

DID $40: Disable Flash Protection (DFP)			R/W*	HS/CE
Byte	Bit	Name	Conversion	
0		Disable Flash Protection	(USN, 1 Byte)	

DID $40 = 0x00 : Flash Protection is disabled
DID $40 = 0x01 : Flash Protection is enabled
For ESP: this DID can only be written on the HS-Bus.
When the Flash Protection is enabled (DID $40 = 0x01), DID $41 *Programming Counter* is incremented at each flash programming (=limited to number defined in section below)
Once the Flash Protection is disabled (DID $40 = 0x00), DID $41 *Programming Counter* is not incremented after each flash programming (=no limit on how often the EBCM SW can be flashed)

After writing DID $40 to 0x00, it cannot be updated anymore and any reject to update it will be rejected with NRC $31.
Security Access has to be unlocked in order to update the value of DID $40 from 0x01 to 0x00.
Flash programming is defined as:
- flashing the calibration file OR
- flashing the operational SW and updating the calibration file
It is not possible to update the operational SW on its own.
Default value:
1 = Flash protection enabled (0x01)

© This document is the exclusive property of Robert Bosch GmbH. Without their consent it may not be reproduced or given to third parties.
If printed this is a uncontrolled document. The user must verify it is an authorized edition prior to use.

4.2.7.8 DID $41: Programming Counter (PC):

DID $41: Programming Counter (PC)			R	HS/CE
Byte	Bit	Name	Conversion	
0		Programming Counter	(USN, 1 Byte)	

The Flash Programming Counter shows how often the system was programmed.
When DID $40 = 0x01 (i.e. Flash protection enabled), the counter is incremented by 1 at every flash procedure.
Flashing of the operational SW + the calibration file is considred as a flash procedure.
Flashing the calibration file only is also considered as flash procedure.
(Range: from 0x00 to 0x5A)
Once the counter reaches 0x5A, reprogramming is not possible anymore and any request for service $36 while the SW is in the bootblock will be denied with NRC $85 (General Programming Failure).
A reprogramming is only possible if the flash protection is disabled by updating the value of DID $40 to 0x00
When DID $40 is written to 0x00, DID $41 will be set to 0x60.
Default value:
0 (0x00)

4.2.7.9 DID $90: Vehicle Identification Number (VIN):

This DID contains the Vehicle Identification Number. The data content shall be specified by the vehicle manufacturer. If the VIN has not yet been programmed into the ECU permanent memory, those locations shall be either “$00” or “$FF”. All 17 digits must be programmed in order for the ECU to use this DID.

DID $90: Vehicle Identification Number (VIN)			R/W*	HS/CE
Byte	Bit	Name	Conversion	
0-16		Vehicle Indentification Number	(ASCII, 17 Bytes)	

Default value:
All bytes set to 0xFF

4.2.7.10 DID $92: System Supplier Id (SYSSUPPID):

This DID contains SystemSupplierId information.
It identifies the ECU hardware supplier and the system type (System Group Identifier)
It also contains a 2-character reserved field for future definition.
The SYSSUPPID is stored in the ROM.
It shall not be possible to change the SYSSUPPID during a programming session or via normal diagnostic services (read-only).a

DID $92: System Supplier Id (SYSSUPID)			R	HS/CE
Byte	Bit	Name	Conversion	
0-4		SystemSupplierIdentifier	(ASCII, 5 Bytes)	
5-6		System Type: 00 = Powertrain 01 = Engine 02 = Transmission 03 = Chassis 04 = Body	(ASCII, 2Bytes)	
7-8		(reserved)	(reserved)	

Default value:
BOSCH03 (0x42 0x4F 0x53 0x43 0x48 0x30 0x33 0x20 0x20)

© This document is the exclusive property of Robert Bosch GmbH. Without their consent it may not be reproduced or given to third parties.
If printed this is a uncontrolled document. The user must verify it is an authorized edition prior to use.

4.2.7.11 DID $98: Repair Shop Code Or Tester Serial Number (RSCOTSN):

This DID contains the RepairShopCodeOrTesterSerialNumber which identifies the dealer code or the tester serial number. This ASCII string is programmed into the ECU memory during the last programming session (SPS) at the dealer site.

DID $98: Repair Shop Code Or Tester Serial Number (RSCOTSN)			R/W	HS/CE
Byte	Bit	Name	Conversion	
0-9		Repair Shop Code Or Tester Serial Number	(ASCII, 10 Bytes)	

Default value:
All bytes set to 0xFF

4.2.7.12 DID $99: Programming Date (PD)

This DID contains the ProgrammingDate of the last programming event (SPS) at the dealer site. This BCD value was programmed into the ECU memory during the last programming session (SPS).

DID $99: Programming Date (PD)			R/W	HS/CE
Byte	Bit	Name	Conversion	
0-3		Programming Date	(BCD, 4 Bytes)	

Format: YYYYMMDD
Default value:
All bytes set to 0x00

4.2.7.13 DID $9A: Diagnostic Data Identifier (DDI)

This DID contains the DiagnosticDataIdentifier which identifies a supplier and system specific diagnostic data stream and shall be used by diagnostic testers to interpret a diagnostic data stream.
The Diagnostic Data Identifier (DDI) shall be part of the application (calibration) software, i.e. the DDI will be updated when a calibration has been programmed and if the updated calibration contains diagnostic capability changes.
System Code (DDI high byte) shall be used to distinguish between the following cases:

- Different ECU systems, where the ECU uses the same Diagnostic Address.
- Different system suppliers of the same component.
- Non-compatible ECU hardware and/or non-compatible software.

Version Number (DDI low byte) shall be incremented when:

- The diagnostic implementation is changed and the changes affect Service/Aftersales and/or Manufacturing diagnostic test tools.
- A bug fix is implemented in the node, which affect the implementation of the Service/Aftersales and/or Manufacturing diagnostic tester tools.

The choice of Diagnostic Data Identifier shall be reviewed, assigned, and approved by GM Service/Aftersales Engineers.

DID $9A: Diagnostic Data Identifier (DDI)			R/W*	HS/CE
Byte	Bit	Name	Conversion	
0		SystemCode	(USN, 1 Byte)	
1		VersionCode	(USN, 1 Byte)	

ESP Default value:
3C-80 (0x3C 0x80)
ABSefault value:
3C-01 (0x3C 0x01)

© This document is the exclusive property of Robert Bosch GmbH. Without their consent it may not be reproduced or given to third parties.
If printed this is a uncontrolled document. The user must verify it is an authorized edition prior to use.

4.2.7.14 DID $9B: XML Configuration Compatibility Identifier (XMLCCID)

This DID is used to ensure that the data read matches the value of the XMLCCID embedded in the XML file before performing any DID writes dictated by the XML configuration file.
This ensures that the configuration data within the XML file is compatible with the software/hardware within the ECU.

DID $9B: XML Configuration Compatibility Identifier(XMLCCID)			R	HS/CE
Byte	Bit	Name	Conversion	
0-1		XMLCCID	(USN, 2 Byte)	

Default value:
7010 (0x70 0x10)

4.2.7.15 DID $9F: Previous Stored Repair Shop Code Or Tester Serial Number (PSRSCOTSN)

This DID contains the PreviousStoredRepairShopCodeOrTesterSerialNumbers. This data provides a mechanism for a tool user to identify up to the last two dealer codes or tester serial numbers programmed into DID $98.
When a tool writes a dealer code or tester serial number into DID $98, the data previously in byte positions #1 through #10 of this DID are moved to positions #11 through #20. The data previously stored in DID $98 are then copied into this DID in byte positions #1 through #10.

ID $9F: Previous Stored Repair Shop Code Or Tester Serial Number (PSRSCOTSN)			R	HS/CE
Byte	Bit	Name	Conversion	
0-9		Last Stored Repair Shop Code Or Tester Serial Number (LSRSCOSN)	(ASCII, 10 Bytes)	
10-19		Second From Last Stored Repair Shop Codes Or Tester Serial Number (SLSRSCOSN)	(ASCII, 10 Bytes)	

Default value:
All bytes set to 0x20 (ASCII = space)

4.2.7.16 DID $A0: Manufacturers Enable Counter (MEC)

The MEC is a variable used to bypass an ECU's seed and key security feature during development and during portions of the node and vehicle manufacturing process.
The MEC allows a node to remain unlocked as long as its value is not $00.
When the value of the MEC becomes $00, security shall be enabled and the Security Access ($27) service shall be required to access secured memory contents.
ECUs shall decrement their MEC upon each ignition cycle. An ignition cycle is defined as a transition in System Power Mode from Off to Run to Off.
Loss of battery power to the control module shall not affect the value of the MEC.
The MEC may be written to any value prior to the MEC = $00 due to normal decrementing or a DID $A0 write.
A node shall not allow the value of the MEC to change once it becomes $00, unless SecurityAccess ($27) is successfully initiated.

DID $A0: Manufacturers Enable Counter (MEC)			R/W*	HS/CE
Byte	Bit	Name	Conversion	
0		ManufacturersEnableCounter $00: ECU is locked $FE - $01: ECU is unlocked $FF: not used	(USN, 1 Byte)	

© This document is the exclusive property of Robert Bosch GmbH. Without their consent it may not be reproduced or given to third parties.
If printed this is a uncontrolled document. The user must verify it is an authorized edition prior to use.

Default value:
0xFE when shipped to the vehicle assembly plant
0x00 when shipped to the dealership for service replacement

4.2.7.17 DID $A1: ECU Configuration or Customization Data 1 (ECUCOCGD1)

Value Added Functions (VAFs) can be activated/deactivated using this DID.
The option are also configured using this DID
When writting this DID a complete ignition cycle is required for the ECU configuration to be updated.
The transition from RUN to OFF to RUN is considered as a complete ignition cycle.

© This document is the exclusive property of Robert Bosch GmbH. Without their consent it may not be reproduced or given to third parties.
If printed this is a uncontrolled document. The user must verify it is an authorized edition prior to use.

DID $A1: ECU Configuration or Customization Data 1 (ECUCOCD1)				R/W*	HS/CE
Byte	Bit	Name	Conversion		Format
0	7	Vacuum Sensor Present [1]	0=not present / 1=present		(USN, 1 Byte)
	6	Start Stop Present OR CAN Vacuum Sensor present [1]	0= NO ST/ST= HardWired Vacuum sensor 1= ST/ST= CAN Vacuum Sensor		
	5	LVHBA / Failed Boost Support [1]	0=disabled / 1=enabled		
	4	Electrical Vacuum Pump Control [1]	TBD		
	3	HSA	0=disabled / 1=enabled		
	2	Automatic Vehicle Hold	0=disabled / 1=enabled		
	1	Hill Roll Back	0=disabled / 1=enabled		
	0	(reserved)			
1	7	CIB [1]	0=disabled / 1=enabled		(USN, 1 Byte)
	6	LSCMB [1]	0=disabled / 1=enabled		
	5	ACC [1]	0=disabled / 1=enabled		
	4	FSR ACC [1]	0=disabled / 1=enabled		
	3	Wheel Speed Sensor Configuration	$00(00) - Default, Non Directional $01(01) - 4 directional (with EOCM) $02(10) - 2 directional on non-driven wheels (APA) $03(11) - Undefined		
	2				
	1	Directional Wheel Speed Sensor Type	0= 3 Level Directional Sensor (VDA) / 1 = 2 Level Directional Sensor		
	0	VSO type	0= 48ppr / 1= 4kppm		
2	7	ARP	0=disabled / 1=enabled		(USN, 1 Byte)
	6	Rear Brake Boost	0=disabled / 1=enabled		
	5	Competitive Mode	0=disabled / 1=enabled		
	4	EPB	0=disabled / 1=enabled		
	3	Trailer Sway Control	0=disabled / 1=enabled		
	2	Steering Torque overlay	0=disabled / 1=enabled		
	1	(reserved)			
	0	(reserved)			
3	7	Powerhop Control	0=disabled / 1=enabled		(USN, 1 Byte)
	6	DMC3	0=disabled / 1=enabled		
	5	Rough Road Package	0=disabled / 1=enabled		
	4	(reserved)			
	3	(reserved)			
	2	(reserved)			
	1	(reserved)			
	0	(reserved)			
4	7	(reserved)			(USN, 1 Byte)
	6	(reserved)			
	5	(reserved)			
	4	(reserved)			
	3	(reserved)			
	2	(reserved)			
	1	(reserved)			
	0	(reserved)			

ESP:

Note 1: Only certain combination of VAFs are allowed as described below. If a request to write this DID with an invalid combination is received (service $3B), the EBCM will reject the request with NRC $31.

© This document is the exclusive property of Robert Bosch GmbH. Without their consent it may not be reproduced or given to third parties.
If printed this is a uncontrolled document. The user must verify it is an authorized edition prior to use.

	Vacuum Sensor Present	Start Stop Present OR CAN Vacuum Sensor present	LVHBA / Failed Boost Support	Electrical Vacuum Pump Control	
DID	A1	A1	A1	A1	
Byte	0	0	0	0	
Bit	7	6	5	4	
	0	0	0	0	ok
	0	0	0	1	NRC $31
	0	0	1	0	NRC $31
	0	0	1	1	NRC $31
	0	1	0	0	ok
	0	1	0	1	NRC $31
	0	1	1	0	NRC $31
	0	1	1	1	NRC $31
	1	0	0	0	ok
	1	0	0	1	ok
	1	0	1	0	ok
	1	0	1	1	ok
	1	1	0	0	ok
	1	1	0	1	ok
	1	1	1	0	ok
	1	1	1	1	ok

ESP:

© This document is the exclusive property of Robert Bosch GmbH. Without their consent it may not be reproduced or given to third parties.
If printed this is a uncontrolled document. The user must verify it is an authorized edition prior to use.

	EPB	CIB	LSCMB	ACC	FSR ACC	
DID	A1	A1	A1	A1	A1	
Byte	2	1	1	1	1	
Bit	4	7	6	5	4	
	0	0	0	0	0	ok
	0	0	0	0	1	NRC $31
	0	0	0	1	0	Ok
	0	0	0	1	1	NRC $31
	0	0	1	0	0	ok
	0	0	1	0	1	NRC $31
	0	0	1	1	0	NRC $31
	0	0	1	1	1	NRC $31
	0	1	0	0	0	ok
	0	1	0	0	1	NRC $31
	0	1	0	1	0	Ok
	0	1	0	1	1	NRC $31
	0	1	1	0	0	NRC $31
	0	1	1	0	1	NRC $31
	0	1	1	1	0	NRC $31
	0	1	1	1	1	NRC $31
	1	0	0	0	0	ok
	1	0	0	0	1	ok
	1	0	0	1	0	ok
	1	0	0	1	1	NRC $31
	1	0	1	0	0	ok
	1	0	1	0	1	NRC $31
	1	0	1	1	0	NRC $31
	1	0	1	1	1	NRC $31
	1	1	0	0	0	ok
	1	1	0	0	1	ok
	1	1	0	1	0	ok
	1	1	0	1	1	NRC $31
	1	1	1	0	0	NRC $31
	1	1	1	0	1	NRC $31
	1	1	1	1	0	NRC $31
	1	1	1	1	1	NRC $31

ESP:

<u>Default value for ESP:</u>
0x08 0x00 0x00 0x80 0x00

© This document is the exclusive property of Robert Bosch GmbH. Without their consent it may not be reproduced or given to third parties.
If printed this is a uncontrolled document. The user must verify it is an authorized edition prior to use.

DID $A1: ECU Configuration or Customization Data 1 (ECUCOCD1)			R/W	HS/CE
Byte	Bit	Name	Conversion	Format
0	7	Vacuum Sensor Present [1]	0=not present / 1=present	(USN, 1 Byte)
	6	Start Stop Present OR CAN Vacuum Sensor present [1]	0= NO ST/ST= HardWired Vacuum sensor 1= ST/ST= CAN Vacuum Sensor	
	5	(reserved)		
	4	Electrical Vacuum Pump Control [1]	TBD	
	3	(reserved)		
	2	(reserved)		
	1	(reserved)		
	0	(reserved)		
1	7	(reserved)		(USN, 1 Byte)
	6	(reserved)		
	5	(reserved)		
	4	(reserved)		
	3	(reserved)		
	2	(reserved)		
	1	(reserved)		
	0	Wheel speed sensor pulse	0= 48ppr / 1= 4kppm	
2	7	(reserved)		(USN, 1 Byte)
	6	(reserved)		
	5	(reserved)		
	4	(reserved)		
	3	(reserved)		
	2	(reserved)		
	1	(reserved)		
	0	(reserved)		
3	7	(reserved)		(USN, 1 Byte)
	6	(reserved)		
	5	Rough Road Package	0=disabled / 1=enabled	
	4	(reserved)		
	3	(reserved)		
	2	(reserved)		
	1	(reserved)		
	0	(reserved)		
4	7	(reserved)		(USN, 1 Byte)
	6	(reserved)		
	5	(reserved)		
	4	(reserved)		
	3	(reserved)		
	2	(reserved)		
	1	(reserved)		
	0	(reserved)		

ABS:

Note 1: Only certain combination of VAFs are allowed as described below. If a request to write this DID with an invalid combination is received (service $3B), the EBCM will reject the request with NRC $31.

© This document is the exclusive property of Robert Bosch GmbH. Without their consent it may not be reproduced or given to third parties.
If printed this is a uncontrolled document. The user must verify it is an authorized edition prior to use.

	Vacuum Sensor Present	Start Stop Present OR CAN Vacuum Sensor present	Electrical Vacuum Pump Control	
DID	A1	A1	A1	
Byte	0	0	0	
Bit	7	6	4	
	0	0	0	ok
	0	0	1	NRC $31
	0	1	0	ok
	0	1	1	NRC $31
	1	0	0	ok
	1	0	1	ok
	1	1	0	ok
	1	1	1	ok

ABS:
Default value for ABS:
0x00 0x00 0x00 0x00 0x00

4.2.7.18 DID $A9: XML Repair Shop Code Or Tester Serial Number (XMLRSCOTSN)

This DID contains the XML RepairShopCodeOrTesterSerialNumber which identifies the dealer's code or the tester's serial number.

DID $A9: XML Repair Shop Code or Tester Serial Number (XMLRSCOTSN)			R/W	HS/CE
Byte	Bit	Name	Format	
0-9		XMLRSCOTSN	(ASCII, 10 Bytes)	

Default value:
All bytes set to 0xFF

4.2.7.19 DID $AA: XML Programming Data (XMLPD)

This DID contains the XMLProgrammingDate of the last XML programming event (SPS) at the dealer site

DID $AA: XML Programming Date (XMLPD)			R/W	HS/CE
Byte	Bit	Name	Format	
0-3		XMLPD	(BCD, 4 Bytes)	

Default value:
All bytes set to 0x00

4.2.7.20 DID $B0: ECU Diagnostic Address (ECUADDR)

This DID contains the diagnostic address of an ECU.
The diagnostic address assigned to the EBCM is $28.
This DID shall be supported by all ECUs when executing operational software and by SPS_TYPE_B ECUs when executing boot software.

© This document is the exclusive property of Robert Bosch GmbH. Without their consent it may not be reproduced or given to third parties.
If printed this is a uncontrolled document. The user must verify it is an authorized edition prior to use.

DID $B0: ECU Diagnostic Address (ECUADDR)			R	HS/CE
Byte	Bit	Name	Conversion	
0		ECUDiagnosticAddress	(USN, 1 Byte)	

Default value:
0x28

4.2.7.21 DID $B2: GM Manufacturing Data (GMMD)

This DID stores the process byte which is needed for the Evac & Fill process.
It is both written and read by tooling in the vehicle assembly plant during the production process.
The ECU memory used for this DID shall be permanent memory (e.g., flash or EEPROM)

DID $B2: GM Manufacturing Data (GMMD)				R/W	HS/CE
Byte	Bit		Name	Conversion	
0			GMManufacturingData/Process Byte	(USN, 1 Byte)	
1-4			GMManufacturingData	(USN, 4 Bytes)	

Default value:
0xFF 0x00 0x00 0x00 0x00

4.2.7.22 DID $B4: Manufacturing Traceability Characters (MTC)

This DID contains the data necessary to meet the component traceability requirements as specified in GMW15862.
These fields are populated at the time of component manufacturing by the manufacturer.

DID $B4: Manufacturing Traceability Characters (MTC)			R	HS/CE
Byte	Bit	Name	Format	
0		Line Identification (Line Id)	(ASCII, 1 Bytes)	
1		Shift Identification 1,2 or3 (Shift Id)	(ASCII, 1 Bytes)	
2-3		Last Two Digits of Year (Year)	(ASCII, 2 Byte)	
4-6		Day of the Year (Day)	(ASCII, 2 Byte)	
7-15		Traceability Number	(ASCII, 9 Bytes)	

The values of this DID are taken and converted from the PDM-IDs that are written by the RB-HU-Plant during production of serial parts. The data are taken from the EePlantProductionControlHU, PDM-ID 23.

© This document is the exclusive property of Robert Bosch GmbH. Without their consent it may not be reproduced or given to third parties.
If printed this is a uncontrolled document. The user must verify it is an authorized edition prior to use.

DID $B4		Byte used in the PDM-ID	Example		
Data Byte	Description		Hex	ASCII	Content
0	**Line Identification**	5	1	31	Line 1
1	**Shift Identification**	7	4	34	4st shift
2-3	**Last Two Digits of Year**	13	0	30	2009
		14	9	39	
4-6	**Day of the Year** Date given in the HU-Plant (DDMM) converted into 3 digits Julian Day of the year as described in the GMW15862.	15	e.g: 4th May = 124 (ASCII: 31, 32, 34) Beware of leap years (4th May = 125)		
		16			
		17			
		18			
7-11	**Traceability Number**	8	0	30	267th part
		9	0	30	
		10	2	32	
		11	6	36	
		12	7	37	
12-15	Padding with 0	-	0	30	0

Wirte explanation about the traceability number here:
- what is the content
- how do we increment the serial number?
- when do we reset it,...?

Traceability must answer the following 4 questions:
- what? Answered with DIDs $CB (End Model Part Number) and $CC (Base Model Part Number)
- who? Answered with DID $B3 (Data Universel Number System Identification)
- which? Answered with 9 Byte Traceability Number of this DID
- when? Answered with 2 Byte Last two digits of year and 3 Byte Day of the Year of this DID

Default value:
All bytes set to 0xFF

4.2.7.23 DID $B5: GM Broadcast Code (GMBC)

This DID contains four alpha characters which represent the ECU broadcast code.
This information corresponds to the 4 letters present on the EBCM sticker.
The broadcast code is unique for each combination of hardware, software, and calibrations for an ECU.
This information will be stored in the EEPROM.

DID $B5: GM Broadcast Code (GMBC)				R	HS/CE
Byte	Bit	Name	Format		
0-3		Broadcast Code	(ASCII, 4 Bytes)		

Default value:
All bytes set to 0xFF

4.2.7.24 DID $B7: GM Software Usage Description (GMSUD):

This DID contains five bytes of data used to identify the intended usage of ECU development software.
The program phase (byte 0) is always set to 0x20.
3 values are possible for the SW release type (higher nibble of byte 1):
- A = approved
- D = development
- F = unknown

The calibration release test is not supported. Therefore the lower nibble of byte 1 is always F.

© This document is the exclusive property of Robert Bosch GmbH. Without their consent it may not be reproduced or given to third parties.
If printed this is a uncontrolled document. The user must verify it is an authorized edition prior to use.

DID $B7: GM Software Usage Description (GMSUD)				R/W	HS/CE
Byte	Bit	Name	Format		
0		Program Phase	(ASCII, 1 Byte)		
1		Software Release Type/Calibration Release Test	(USN, 1 Byte)		
2		(reserved)	(USN, 1 Byte)		
3-4		(reserved)	(USN, 2 Bytes)		

Default value:
0x20 0xDF 0x00 0x00 0x00

4.2.7.25 DID $B8: GM Bench Verification Information (GMBVI):

This DID contains five bytes of data used to provide information about bench verification during the development process.

DID $B8: GM Bench Verification Information (GMBVI)				R/W*	HS/CE
Byte	Bit		Name	Conversion	
0-1			Verification Initials	(ASCII, 2 Bytes)	
2-4			Verification Date	(USN, 3 Bytes)	

This DID is secured for writing

- Verification Initials:
  ASCII representation of the first and last initials of the individual who authorized this software release by checking a sample version on the software integration bench.
  Take initials of person who uploaded the SW in Supply Power (Bosch CSW-PR)
- Verification Date:
  Represents the date where the verification took place.
  Format: YY/MM/DD. For the year a 0 represents year 1900
- e.g.:
  Bench verification performed on April 15th 2013 by John Martin Smith.
  $B8: 0x4A (J) 0x53 (S) 0x71 (113 = 2013 - 1900) 0x04 (4: April) 0x15 (15th)

Default value:
There is no default value for this DID as this information is provided each time a SW is built.

4.2.7.26 DID $C0: Boot Software Part Number (BSPN)

This DID contains BootSoftwarePartNumber information which is a 4-byte, unsigned numeric representation of the 8-digit GM part number assigned to the boot software of the ECU.

DID $C0: Boot Software Part Number (BSPN)				R	HS/CE
Byte	Bit		Name	Conversion	
0-3			BootSoftwarePartNumber	(USN, 4 Bytes)	

ESP Default value:
13427312 (0x00 0xCC 0xE2 0x70)
ABS Default value:
13432627 (0x00 0xCC 0xF7 0x33)

4.2.7.27 DID $C1: Software Module Identifier 1 (SWMI1)

This DID contains OperationalSoftwarePartNumber information which is a 4-byte, unsigned numeric representation of the 8-digit GM part number assigned to the operational software of the ECU.

© This document is the exclusive property of Robert Bosch GmbH. Without their consent it may not be reproduced or given to third parties.
If printed this is a uncontrolled document. The user must verify it is an authorized edition prior to use.

DID $C1: Software Module Identifier 1 (SWMI1)				R	HS/CE
Byte	Bit		Name	Conversion	
0-3			SoftwareModuleIdentifier1	(USN, 4 Bytes)	

ESP Default value:
- 13427311 (0x00 0xCC 0xE2 0x6F) for ECU without XCP measurement
- 99992101 (0x05 0xF5 0xC2 0x25) for ECU with XCP measurement

ABS Default value:
- 13427310 (0x00 0xCC 0xE2 0x6E) for ECU without XCP measurement
- 99992100 (0x05 0xF5 0xC2 0x24) for ECU with XCP measurement

4.2.7.28 DID $C2: Software Module Identifier 2 (SWMI2)

This DID contains CalibrationSoftwarePartNumber information which is a 4-byte, unsigned numeric representation of the 8-digit GM part number assigned to the calibration software of the ECU.

DID $C2: Software Module Identifier 2 (SWMI2)				R	HS/CE
Byte	Bit		Name	Conversion	
0-3			SoftwareModuleIdentifier2	(USN, 4 Bytes)	

ESP Default value:
Default value depends on configuration – see *customer data overview* for more information.

ABS Default value:
TBD

4.2.7.29 DID $CB: End Model Part Number (EMPN)

This DID is used to identify the part number that represents the combination of hardware/software/calibrations present in the ECU as it is received in the vehicle assembly plant.

DID $CB: End Model Part Number (EMPN)				R	HS/CE
Byte	Bit		Name	Conversion	
0-3			EndModelPartNumber	(USN, 4 Bytes)	

ESP Default value:
Default value depends on configuration – see *customer data overview* for more information.

ABS Default value:
- 13424532 (0x00 0xCC 0xD7 0x94) for ECU without XCP measurement
- 99991000 (0x05 0xF5 0xBD 0xB8) for ECU with XCP measurement

4.2.7.30 DID $CC: Base Model Part Number (BMPN)

This DID contains BaseModelPartNumber information which is used during SPS programming to identify a unique combination of ECU hardware and all non-reprogrammable software (e.g., Boot software).
The BMPN must be stored in the ECU in a non-erasable memory area (e.g., boot sector of flash, or EEPROM).

DID $CC: Base Model Part Number (BMPN)				R	HS/CE
Byte	Bit		Name	Conversion	
0-3			BaseModelPartNumber	(USN, 4 Bytes)	

ESP Default value:
- 13427319 (0x00 0xCC 0xE2 0x77) for ECU without XCP measurement.
- 99991101 (0x05 0xF5 0xBE 0x3D) for ECU with XCP measurement.

ABS Default value:
- 13427318 (0x00 0xCC 0xE2 0x76) for ECU without XCP measurement.
- 99991100 (0x05 0xF5 0xBE 0x3C) for ECU with XCP measurement.

© This document is the exclusive property of Robert Bosch GmbH. Without their consent it may not be reproduced or given to third parties.
If printed this is a uncontrolled document. The user must verify it is an authorized edition prior to use.

4.2.7.31 DID $D0: Boot Software Part Number Alpha Code (BSPNAC)

This DID contains the 2-character representation of the Alpha Code (or Design Level suffix) associated with the BootSoftwarePartNumber (stored in dataIdentifier $C0).

DID $D0: Boot Software Part Number Alpha Code (BSPNAC)				R	HS/CE
Byte	Bit		Name	Conversion	
0-1			BootSoftwarePartNumberAlphaCode	(ASCII, 2 Bytes)	

Default value:
AA (0x41 0x41)

4.2.7.32 DID $D1: Software Module Identifier Alpha Code 1 (SWMIAC1)

This DID contains the 2-character representation of the Alpha Code (or Design Level suffix) associated with the OperationalSoftwarePartNumber (stored in dataIdentifier $C1).

DID $D1: Software Module Identifier Alpha Code 1 (SWMIAC1)				R	HS/CE
Byte	Bit		Name	Conversion	
0-1			SoftwareModuleIdentifierAlphaCode1	(ASCII, 2 Bytes)	

ESP Default value:
FC (0x46 0x43)
ABS Default value:
EA (0x45 0x41)

4.2.7.33 DID $D2: Software Module Identifier Alpha Code 2 (SWMIAC2)

This DID contains the 2-character representation of the Alpha Code (or Design Level suffix) associated with the CalibrationSoftwarePartNumber (stored in dataIdentifier $C2).

DID $D2: Software Module Identifier Alpha Code 2 (SWMIAC2)				R	HS/CE
Byte	Bit		Name	Conversion	
0-1			SoftwareModuleIdentifierAlphaCode2	(ASCII, 2 Bytes)	

ESP Default value:
FC (0x46 0x43)
ABS Default value:
EA (0x45 0x41)

4.2.7.34 DID $DB: End Model Part Number Alpha Code (EMPNAC)

This DID contains the 2-character representation of the Alpha Code (or Design Level suffix) associated with the EndModelPartNumber (stored in dataIdentifier $CB).

DID $DB: End Model Part Number Alpha Code (EMPNAC)				R	HS/CE
Byte	Bit		Name	Conversion	
0-1			EndModelPartNumberAlphaCode	(ASCII, 2 Bytes)	

Default value:
AA (0x41 0x41)

4.2.7.35 DID $DC: Base Model Part Number Alpha Code (BMPNAC)

This DID contains the 2-character representation of the Alpha Code (or Design Level suffix) associated with the BaseModelPartNumber (stored in dataIdentifier $CC).

© This document is the exclusive property of Robert Bosch GmbH. Without their consent it may not be reproduced or given to third parties.
If printed this is a uncontrolled document. The user must verify it is an authorized edition prior to use.

DID $DC: Base Model Part Number Alpha Code (BMPNAC)				R	HS/CE
Byte	Bit		Name	Conversion	
0-1			BaseModelPartNumberAlphaCode	(ASCII, 2 Bytes)	

Default value:
AA (0x41 0x41)

4.2.7.36 DID $DE: GMLAN Identification Data (GMLANID)

This DID represents the revision level of the GM serial data database file implemented on the specified networks.
The information shall be repeated for each GMLAN network that the controller is connected to.

DID $DE: GMLAN Identification Data (GMLANID)				R	HS
Byte	Bit		Name	Conversion	
0			Bus Type – High Speed	(USN, 1 Byte)	
1			GMLAN (Kernel) Handler Main Version	(USN, 1 Byte)	
2			GMLAN (Kernel) Handler Sub Version	(USN, 1 Byte)	
3-5			GMLAN Data Dictionary	(USN, 3 Bytes)	
6			Bus Type – Chassis Expansion	(USN, 1 Byte)	
7			GMLAN (Kernel) Handler Main Version	(USN, 1 Byte)	
8			GMLAN (Kernel) Handler Sub Version	(USN, 1 Byte)	
9-11			GMLAN Data Dictionary	(USN, 3 Bytes)	

ESP:
Default value:
0x02 0x03 0x00 0x07 0x01 0x01
0x03 0x03 0x00 0x07 0x01 0x01

DID $DE: GMLAN Identification Data (GMLANID)				R	HS
Byte	Bit		Name	Conversion	
0			Bus Type – High Speed	(USN, 1 Byte)	
1			GMLAN (Kernel) Handler Main Version	(USN, 1 Byte)	
2			GMLAN (Kernel) Handler Sub Version	(USN, 1 Byte)	
3-5			GMLAN Data Dictionary	(USN, 3 Bytes)	

ABS:
Default value:
0x02 0x03 0x00 0x07 0x01 0x01

© This document is the exclusive property of Robert Bosch GmbH. Without their consent it may not be reproduced or given to third parties.
If printed this is a uncontrolled document. The user must verify it is an authorized edition prior to use.

4.2.8 PID Requirements

4.2.8.1 List of Supported PIDs

Parameter Identifier	Hex Value
Evac and Fill Routine Feedback	4011
Repair Bleed Routine Feedback	4012
Static Test Routine Feedback	4014
Dynamic Test Routine Feedback - Front Wheels	4017
Dynamic Test Routine Feedback - Rear Wheels	4018
System Voltage	402D
ABS System Failure Status	404C
ABS System General Statuses	404D
Left Front Wheel Speed – Unfiltered	4051
Right Front Wheel Speed – Unfiltered	4052
Right Rear Wheel Speed – Unfiltered	4053
Left Rear Wheel Speed – Unfiltered	4054
Left Front Wheel Acceleration	4055
Right Front Wheel Acceleration	4056
Right Rear Wheel Acceleration	4057
Left Rear Wheel Acceleration	4058
ABS Solenoid Feedback Status	4069
ABS Solenoid Commanded Status	406A
TCS/VSES Solenoid Feedback Status	406B
TCS/VSES Solenoid Commanded Status	406C
Pump Motor Voltage Unfiltered	4071
ABS Switch Inputs and Statuses	4075
ABS Test and Learn Statuses	4077
Left Front Wheel Speed	4145
Right Front Wheel Speed	4146
Right Rear Wheel Speed	4147
Left Rear Wheel Speed	4148

4.2.8.2 PID $4011: *Evac and Fill Routine Feedback*

PID $4011: Evac and Fill Routine Feedback						
Byte	Name	Scaling	Units	Resolution	Offset	Range
1	Valid Data Available	-	-	-	-	-
2	Result Byte	-	-	-	-	-

The content of Byte 3 depends on the current status of the Evac and Fill Routine. If the Routine was never running before in the current Diagnostic Session, it will be
00H. If it's still running it will be FFH, and if the Routine has finished and the result data is available, it will be 02H. When ECU is reset (by a hsCAN CommEnable
power cycle or ignition), the feedback will be 00H even if evac and fill routine was executed in last Ignition cycle.

© This document is the exclusive property of Robert Bosch GmbH. Without their consent it may not be reproduced or given to third parties.
If printed this is a uncontrolled document. The user must verify it is an authorized edition prior to use.

Valid Data Available:

- 00 Init value
- 02 Data available
- FF Data not available

Result Byte:

- 00 Init value
- 01 Routine running
- 02 Routine finished successfully
- 04 Routine Interrupted by User
- 08 Routine aborted due to error detection

All other values are internal states which indicate that the routine is still running.

4.2.8.3 PID $4012: Repair Bleeding Routine Feedback

PID $4012: Repair Bleeding Routine Feedback						
Byte	Name	Scaling	Units	Resolution	Offset	Range
1	Valid Data Available	-	-	-	-	-
2	Result Byte	-	-	-	-	-

The content of Byte 3 depends on the current status of the Repair Bleed Routine. If the Routine was never running before in the current Diagnostic Session, it will be
00H. If it's still running it will be FFH, and if the Routine has finished and the result data is available, it will be 02H. When ECU is reset (by a hsCAN CommEnable
power cycle or ignition), the feedback will be 00H even if Repair Bleed Routine was executed in last Ignition cycle.

Valid Data Available:

- 00 Init value
- 02 Data available
- FF Data not available

Result Byte:

- 00 Init value
- 01 Routine running
- 02 Routine finished successfully
- 04 Routine Interrupted by User
- 08 Routine aborted due to error detection
- All other values are internal states which indicate that the routine is still running.
-

4.2.8.4 PID $4014: Static Test Routine Feedback

PID $4014: Static Test Routine Feedback						
Byte	Name	Scaling	Units	Resolution	Offset	Range
1	Valid Data Available	-	-	-	-	-
2	Result Byte	-	-	-	-	-

The content of Byte 3 depends on the current status of the Static Test Routine. If the Routine was never running before in the current Diagnostic Session, it will be 00H.

© This document is the exclusive property of Robert Bosch GmbH. Without their consent it may not be reproduced or given to third parties.
If printed this is a uncontrolled document. The user must verify it is an authorized edition prior to use.

If it's still running it will be FFH, and if the Routine has finished and the result data is available, it will be 02H. When ECU is reset (by a hsCAN CommEnable power
cycle or ignition), the feedback will be 00H even if Static Test Routine was executed in last Ignition cycle.

Valid Data Available:

- 00 Init value
- 02 Data available
- FF Data not available

Result Byte:

- 00 Init value
- 01 Routine running
- 02 Routine finished successfully
- 04 Routine Interrupted by User
- 08 Routine aborted due to error detection
- All other values are internal states which indicate that the routine is still running.

4.2.8.5 PID $4017: Dynamic Test Routine Feedback – Front Wheels

PID $4017: Dynamic Test Routine Feedback – Front Wheels						
Byte	Name	Scaling	Units	Resolution	Offset	Range
1	Valid Data Available	-	-	-	-	-
2	1.ResultByte: delta v front left (HB)	E=N*0.015625	m/s	-	-	-100 - 100
3	2.ResultByte: delta v front left (LB)	E=N*0.015625	m/s	-	-	-100 - 100
4	3.ResultByte: delta v front right (HB)	E=N*0.015625	m/s	-	-	-100 - 100
5	4.ResultByte: delta v front right (LB)	E=N*0.015625	m/s	-	-	-100 - 100

Valid Data Available:

- 00 Init value
- 02 Data available
- FF Data not available

4.2.8.6 PID $4018: Dynamic Test Routine Feedback – Rear Wheels

PID $4018: Dynamic Test Routine Feedback –Rear Wheels						
Byte	Name	Scaling	Units	Resolution	Offset	Range
1	Valid Data Available	-	-	-	-	-
2	1.ResultByte: delta v rear left (HB)	E=N*0.015625	m/s	-	-	-100 - 100
3	2.ResultByte: delta v rear left (LB)	E=N*0.015625	m/s	-	-	-100 - 100
4	3.ResultByte: delta v rear right (HB)	E=N*0.015625	m/s	-	-	-100 - 100
5	4.ResultByte: delta v rear right (LB)	E=N*0.015625	m/s	-	-	-100 - 100

© This document is the exclusive property of Robert Bosch GmbH. Without their consent it may not be reproduced or given to third parties.
If printed this is a uncontrolled document. The user must verify it is an authorized edition prior to use.

Valid Data Available:

- 00 Init value
- 02 Data available
- FF Data not available

4.2.8.7 PID $402D: System Voltage

PID $402D: System Voltage						
Byte	Name	Scaling	Units	Resolution	Offset	Range
1	System Voltage	E = N * 0.0669	Volts	0.0669	0	0 to 17

4.2.8.8 PID $404C: ABS System Failure Status

PID $404C: ABS System Failure Status							
Byte	Bit	Name	Scaling	Units	Resolution	Offset	Range
1	7	DRP Failed	1 = Yes, 0 = No	N/A	N/A	N/A	N/A
	6	TIM Failed	1 = Yes, 0 = No	N/A	N/A	N/A	N/A
	5	PBA Failed	1 = Yes, 0 = No	N/A	N/A	N/A	N/A
	4	VSE Failed	1 = Yes, 0 = No	N/A	N/A	N/A	N/A
	3	(reserved)	0 = No	N/A	N/A	N/A	N/A
	2	EDC Failed	1 = Yes, 0 = No	N/A	N/A	N/A	N/A
	1	TCS Failed	1 = Yes, 0 = No	N/A	N/A	N/A	N/A
	0	ABS Failed	1 = Yes, 0 = No	N/A	N/A	N/A	N/A

If a feature is not supported, the bit should be set to 0 by default.

© This document is the exclusive property of Robert Bosch GmbH. Without their consent it may not be reproduced or given to third parties.
If printed this is a uncontrolled document. The user must verify it is an authorized edition prior to use.

4.2.8.9 PID $404D: ABS System General Statuses

PID $404D: ABS System General Statuses							
Byte	Bit	Name	Scaling	Units	Resolution	Offset	Range
1	7	DRP Active	1 = Yes, 0 = No	N/A	N/A	N/A	N/A
	6	PBA Active	1 = Yes, 0 = No	N/A	N/A	N/A	N/A
	5	VSE Active	1 = Yes, 0 = No	N/A	N/A	N/A	N/A
	4	EDC Active	1 = Yes, 0 = No	N/A	N/A	N/A	N/A
	3	TCS Active	1 = Yes, 0 = No	N/A	N/A	N/A	N/A
	2	ABS Active	1 = Yes, 0 = No	N/A	N/A	N/A	N/A
	1	Reserved	N/A	N/A	N/A	N/A	N/A
	0	Reserved	N/A	N/A	N/A	N/A	N/A

If a feature is not supported, the bit should be set to 0 by default.

4.2.8.10 PID $4051: Left Front Wheel Speed - Unfiltered

PID $4051: Left Front Wheel Speed - Unfiltered						
Byte	Name	Scaling	Units	Resolution	Offset	Range
1	Left Front Wheel Speed - Unfiltered	E = N * 0.6275	km/h	0.6275	0	0 to 160

4.2.8.11 PID $4052: Right Front Wheel Speed - Unfiltered

PID $4052: Right Front Wheel Speed - Unfiltered						
Byte	Name	Scaling	Units	Resolution	Offset	Range
1	Right Front Wheel Speed - Unfiltered	E = N * 0.6275	km/h	0.6275	0	0 to 160

4.2.8.12 PID $4053: Right Rear Wheel Speed - Unfiltered

PID $4053: Right Rear Wheel Speed - Unfiltered						
Byte	Name	Scaling	Units	Resolution	Offset	Range
1	Right Rear Wheel Speed - Unfiltered	E = N * 0.6275	km/h	0.6275	0	0 to 160

4.2.8.13 PID $4054: Left Rear Wheel Speed - Unfiltered

PID $4054: Left Rear Wheel Speed - Unfiltered						
Byte	Name	Scaling	Units	Resolution	Offset	Range
1	Left Rear Wheel Speed - Unfiltered	E = N * 0.6275	km/h	0.6275	0	0 to 160

© This document is the exclusive property of Robert Bosch GmbH. Without their consent it may not be reproduced or given to third parties.
If printed this is a uncontrolled document. The user must verify it is an authorized edition prior to use.

4.2.8.14 PID $4055: Left Front Wheel Acceleration

PID $4055: Left Front Wheel Acceleration						
Byte	Name	Scaling	Units	Resolution	Offset	Range
1-2	Left Front Wheel Acceleration	E = N	mm/s^2	1	0	-32768 to 32767

4.2.8.15 PID $4056: Right Front Wheel Acceleration

PID $4056: Right Front Wheel Acceleration						
Byte	Name	Scaling	Units	Resolution	Offset	Range
1-2	Right Front Wheel Acceleration	E = N	mm/s^2	1	0	-32768 to 32767

4.2.8.16 PID $4057: Right Rear Wheel Acceleration

PID $4057: Right Rear Wheel Acceleration						
Byte	Name	Scaling	Units	Resolution	Offset	Range
1-2	Right Rear Wheel Acceleration	E = N	mm/s^2	1	0	-32768 to 32767

4.2.8.17 PID $4058: Left Rear Wheel Acceleration

PID $4058: Left Rear Wheel Acceleration						
Byte	Name	Scaling	Units	Resolution	Offset	Range
1-2	Left Rear Wheel Acceleration	E = N	mm/s^2	1	0	-32768 to 32767

4.2.8.18 PID $4069: ABS Solenoid Feedback Status

PID $4069: ABS Solenoid Feedback Status							
Byte	Bit	Name	Scaling	Units	Resolution	Offset	Range
1	7	RR Release Solenoid Feedback	1 = Active, 0 = Inactive	N/A	N/A	N/A	N/A
	6	RR Apply Solenoid Feedback	1 = Active, 0 = Inactive	N/A	N/A	N/A	N/A
	5	LR Release Solenoid Feedback	1 = Active, 0 = Inactive	N/A	N/A	N/A	N/A
	4	LR Apply Solenoid Feedback	1 = Active, 0 = Inactive	N/A	N/A	N/A	N/A
	3	RF Release Solenoid Feedback	1 = Active, 0 = Inactive	N/A	N/A	N/A	N/A
	2	RF Apply Solenoid Feedback	1 = Active, 0 = Inactive	N/A	N/A	N/A	N/A
	1	LF Release Solenoid Feedback	1 = Active, 0 = Inactive	N/A	N/A	N/A	N/A
	0	LF Apply Solenoid Feedback	1 = Active, 0 = Inactive	N/A	N/A	N/A	N/A

© This document is the exclusive property of Robert Bosch GmbH. Without their consent it may not be reproduced or given to third parties.
If printed this is a uncontrolled document. The user must verify it is an authorized edition prior to use.

4.2.8.19 PID $406A: ABS Solenoid Commanded Status

PID $406A: ABS Solenoid Commanded Status							
Byte	Bit	Name	Scaling	Units	Resolution	Offset	Range
1	7	RR Release Solenoid Commanded	1 = Active, 0 = Inactive	N/A	N/A	N/A	N/A
	6	RR Apply Solenoid Commanded	1 = Active, 0 = Inactive	N/A	N/A	N/A	N/A
	5	LR Release Solenoid Commanded	1 = Active, 0 = Inactive	N/A	N/A	N/A	N/A
	4	LR Apply Solenoid Commanded	1 = Active, 0 = Inactive	N/A	N/A	N/A	N/A
	3	RF Release Solenoid Commanded	1 = Active, 0 = Inactive	N/A	N/A	N/A	N/A
	2	RF Apply Solenoid Commanded	1 = Active, 0 = Inactive	N/A	N/A	N/A	N/A
	1	LF Release Solenoid Commanded	1 = Active, 0 = Inactive	N/A	N/A	N/A	N/A
	0	LF Apply Solenoid Commanded	1 = Active, 0 = Inactive	N/A	N/A	N/A	N/A

4.2.8.20 PID $406B: Pump Motor and System Relay Feedback Status

PID $406B: TCS/VSES Solenoid Feedback Status							
Byte	Bit	Name	Scaling	Units	Resolution	Offset	Range
1	7	Pump motor relay Feedback	1 = Active, 0 = Inactive	N/A	N/A	N/A	N/A
	6	Primary prime Solenoid Feedback	1 = Active, 0 = Inactive	N/A	N/A	N/A	N/A
	5	Secondary prime Solenoid Feedback	1 = Active, 0 = Inactive	N/A	N/A	N/A	N/A
	4	Primary isolation Solenoid Feedback	1 = Active, 0 = Inactive	N/A	N/A	N/A	N/A
	3	Secondary isolation Solenoid Feedback	1 = Active, 0 = Inactive	N/A	N/A	N/A	N/A
	2	Pre-Charge Pump Motor Relay Feedback	1 = Active, 0 = Inactive	N/A	N/A	N/A	N/A
	1	System Enable Relay Feedback	1 = Active, 0 = Inactive	N/A	N/A	N/A	N/A
	0	Bi-State Engine Mount Feedback	1 = Active, 0 = Inactive	N/A	N/A	N/A	N/A

© This document is the exclusive property of Robert Bosch GmbH. Without their consent it may not be reproduced or given to third parties.
If printed this is a uncontrolled document. The user must verify it is an authorized edition prior to use.

4.2.8.21 PID $406C: Pump Motor and System Relay Commanded Status

PID $406C: TCS/VSES Solenoid Commanded Status							
Byte	Bit	Name	Scaling	Units	Resolution	Offset	Range
1	7	Pump motor relay Commanded	1 = Active, 0 = Inactive	N/A	N/A	N/A	N/A
	6	Primary prime Solenoid Commanded	1 = Active, 0 = Inactive	N/A	N/A	N/A	N/A
	5	Secondary prime Solenoid Commanded	1 = Active, 0 = Inactive	N/A	N/A	N/A	N/A
	4	Primary isolation Solenoid Commanded	1 = Active, 0 = Inactive	N/A	N/A	N/A	N/A
	3	Secondary isolation Solenoid Commanded	1 = Active, 0 = Inactive	N/A	N/A	N/A	N/A
	2	Pre-Charge Pump Motor Relay Commanded	1 = Active, 0 = Inactive	N/A	N/A	N/A	N/A
	1	System Enable Relay Commanded	1 = Active, 0 = Inactive	N/A	N/A	N/A	N/A
	0	Bi-State Engine Mount Commanded	1 = Active, 0 = Inactive	N/A	N/A	N/A	N/A

4.2.8.22 PID $4071: Pump Motor Voltage Unfiltered

PID $4071: Pump Motor Voltage Unfiltered						
Byte	Name	Scaling	Units	Resolution	Offset	Range
1	Pump Motor Voltage Unfiltered	E = N * 0.0669	Volts	0.0669	0	0 to 17

4.2.8.23 PID $4075: ABS Switch Inputs and Statuses

PID $4075: ABS Switch Inputs and Statuses							
Byte	Bit	Name	Scaling	Units	Resolution	Offset	Range
1	7	Brake applied	1 = Applied, 0 = Not Applied	N/A	N/A	N/A	N/A
	6	TCS Driver Intent	1 = On, 0 = Off	N/A	N/A	N/A	N/A
	5	VSES Driver Intent	1 = On, 0 = Off	N/A	N/A	N/A	N/A
	4	In four wheel drive	1 = Yes, 0 = No	N/A	N/A	N/A	N/A
	3	Brake fluid low	1 = Yes, 0 = No	N/A	N/A	N/A	N/A
	2	Reserved	Undefined	N/A	N/A	N/A	N/A
	1	Brake Lining Wear Input Status	1 = High, 0 = Low	N/A	N/A	N/A	N/A
	0	Reserved	Undefined	N/A	N/A	N/A	N/A

© This document is the exclusive property of Robert Bosch GmbH. Without their consent it may not be reproduced or given to third parties.
If printed this is a uncontrolled document. The user must verify it is an authorized edition prior to use.

4.2.8.24 PID $4077: ABS Test and Learn Statuses

PID $4077: ABS Test and Learn Statuses							
Byte	Bit	Name	Scaling	Units	Resolution	Offset	Range
1	7	EVAC or FILL sequence status	1 = Complete, 0 = Incomplete	N/A	N/A	N/A	N/A
	6	EVAC or FILL sequence in progress	1 = In progress	N/A	N/A	N/A	N/A
	5	(reserved)	N/A	N/A	N/A	N/A	N/A
	4	(reserved)	N/A	N/A	N/A	N/A	N/A
	3	(reserved)	N/A	N/A	N/A	N/A	N/A
	2	(reserved)	N/A	N/A	N/A	N/A	N/A
	1	(reserved)	N/A	N/A	N/A	N/A	N/A
	0	Bleed Procedure Status	1 = Pump Prime sequence complete 0 = In progress	N/A	N/A	N/A	N/A

Only the status of the last executed EOL routine is available in this PID.
The status of the last routine is not stored in eeprom.
If an error occurs during the evacuation or filling process the status will be shown as incomplete (bit 7 = 0) and not in progress (bit 6 = 0)

4.2.8.25 PID $4145: Left Front Wheel Speed

PID $4145: Left Front Wheel Speed						
Byte	Name	Scaling	Units	Resolution	Offset	Range
1	Left Front Wheel Speed	E=N	Km/h	1	0	0 to 255

4.2.8.26 PID $4146: Right Front Wheel Speed

PID $4146: Right Front Wheel Speed						
Byte	Name	Scaling	Units	Resolution	Offset	Range
1	Right Front Wheel Speed	E=N	Km/h	1	0	0 to 255

4.2.8.27 PID $4147: Right Rear Wheel Speed

PID $4146: Right Rear Wheel Speed						
Byte	Name	Scaling	Units	Resolution	Offset	Range
1	Right Rear Wheel Speed	E=N	Km/h	1	0	0 to 255

© This document is the exclusive property of Robert Bosch GmbH. Without their consent it may not be reproduced or given to third parties.
If printed this is a uncontrolled document. The user must verify it is an authorized edition prior to use.

4.2.8.28 PID $4148: Left Rear Wheel Speed

PID $4148: Left Rear Wheel Speed						
Byte	Name	Scaling	Units	Resolution	Offset	Range
1	Left Rear Wheel Speed	E=N	Km/h	1	0	0 to 255

4.2.9 CPID Requirements

4.2.9.1 General Requirements for Corporate Common CPIDs

A node which implements any of the corporate common CPIDs shall use the corporate common CPID number assigned and adhere to the bit and byte level positions defined.
Corporate common CPIDs shall always contain a fixed number of bytes (the number may vary from one common CPID to another) even though a device may choose to not implement all of the functions defined for that CPID.
Nodes shall not add additional device control features into a corporate common CPID.

4.2.9.2 List of Supported CPIDs

CPID	Hex Value
Cancel All Active Device Control	00
ABS/TCS/VSES Modulator and Display Controls	01
ABS/TCS/VSES Configuration Controls and VES Control	02
Pump Prime Sequence Timer Override	03
Valve Multi-State Control CPID	04
Evac and Fill Sequence Timer Override	0A
Repair Bleed Routine	12
Static Test	14
Lamp Activation	15
Dynamic Test	17
System Basic Functions	FD

4.2.9.3 CPID $00: Cancel All Active Device Controls

4.2.9.3.1 Overview:

CPID $00 is used to completely cancel all active device control.

4.2.9.4 CPID $01: ABS/TCS/VSES Modulator Valves and Pumps Control:

4.2.9.4.1 Overview

When this CPID is received, the Valve states change to match the states specified in the CPID.

© This document is the exclusive property of Robert Bosch GmbH. Without their consent it may not be reproduced or given to third parties.
If printed this is a uncontrolled document. The user must verify it is an authorized edition prior to use.

4.2.9.4.2 Control Bytes

ABS:

Byte	Content								Hex Value
1 Device Enable And State Control	Bit 7	Bit 6	Bit 5	Bit 4	Bit 3	Bit 2	Bit 1	Bit 0	Xx
	Reserved	Reserved	Reserved	Reserved	Reserved	Pre-Charge Pump Motor Control Enable Yes = 1 No = 0	Pump Motor Control Enable Yes = 1 No = 0	ABS/TCS Valve Control Enable Yes = 1 No = 0	
2 ABS Device Enable And State Control	Bit 7	Bit 6	Bit 5	Bit 4	Bit 3	Bit 2	Bit 1	Bit 0	Xx
	RR Release Valve On = 1 Off = 0	RR Apply Valve On = 1 Off = 0	LR Release Valve On = 1 Off = 0	LR Apply Valve On = 1 Off = 0	RF Release Valve On = 1 Off = 0	RF Apply Valve On = 1 Off = 0	LF Release Valve On = 1 Off = 0	LF Apply Valve On = 1 Off = 0	
3 TCS \ VSES Device Enable And State Control	Bit 7	Bit 6	Bit 5	Bit 4	Bit 3	Bit 2	Bit 1	Bit 0	Xx
	Reserved	Reserved	Reserved	Reserved	Reserved	Reserved	Reserved	Reserved	
4 Device Control	Pre-Charge Pump Motor Voltage Control 0 - 255 = 0 - 100 % $00= 0%, $FF = 100%, 0.392% / Count OR $00 = OFF and <>$00 = ON								Xx
5 Device Control	Pump Motor Voltage Control $00 = OFF and <>$00 = ON								Xx

4.2.9.4.3 Device Control Limit Exceeded Conditions:

4.2.9.4.3.1 *ABS/TCS Valve Controls*

Return Code	Device Control Limit Exceeded Description	Active for Service	Active for DVT
$5001	Wheel Speed Threshold of 3km/h Exceeded	*Y*	*N*
$5002	Maximum Valve Or Pump Control Timer Exceeded	*Y*	*Y*
$5003	Voltage Out Of Range [9V – 16V]	*Y*	*Y*
$5004	Valve Or Pump Fault Detected	*Y*	*Y*
$5005	System Currently Active	*Y*	*Y*

© This document is the exclusive property of Robert Bosch GmbH. Without their consent it may not be reproduced or given to third parties.
If printed this is a uncontrolled document. The user must verify it is an authorized edition prior to use.

4.2.9.4.3.2 *Pump Motor Control*

Return Code	Device Control Limit Exceeded Description	Active for Service	Active for DVT
$5001	Wheel Speed Threshold of 3km/h Exceeded	*Y*	*N*
$5002	Maximum Valve Or Pump Control Timer Exceeded	*Y*	*Y*
$5003	Voltage Out Of Range [9V – 16V]	*Y*	*Y*
$5004	Valve Or Pump Fault Detected	*Y*	*Y*
$5005	System Currently Active	*Y*	*Y*

4.2.9.5 CPID $02: ABS/TCS/VSES Configuration Controls and VES Control:

4.2.9.5.1 Overview:

4.2.9.5.1.1 Steering angle Offset Learn

This device control allows a tester to reset the offset compensation of the steering angle sensor.

4.2.9.5.1.2 Pump Prime Sequence

This device control allows a tester to initiate the Pump Prime Sequence.
If procedure fails then the bit shall say complete and the controller shall send a $EE $E3 xx xx response defining why it failed.

4.2.9.5.1.3 Vacuum Pump Control

This device control allows a tester to command the Electric Vacuum Pump
The maximum continuous EVP runtime is limited to two minutes

4.2.9.5.1.4 Semi-Autocycling

This device control allows a tester to command the Evac and the Fill Sequences.
This device control can only be executed while the MEC counter is not “0”.
The result of the Evac- and the Fill procedure can be monitored via PID $4077 and $43D3.
For the Evac and Fill Process bosch recommanded actuation times are implemented in the eeprom:
- 90s for the Evacuation
- 60s for the Filling

These actuation times can be modified using CPID $0A.
During the evacuation phase all the valves are activated cyclically to create vacuum in the EBCM cavities.
During the filling phase all the valves are activated cyclically to fill the EBCM cavities with brake fluid.
If a running reset is received while the evacuation or the filling is in progress, the routine will be interrupted.
If the routine has been interupted a repair bleeding is necessary to insure a successful evacuation and filling routine.

© This document is the exclusive property of Robert Bosch GmbH. Without their consent it may not be reproduced or given to third parties.
If printed this is a uncontrolled document. The user must verify it is an authorized edition prior to use.

4.2.9.5.2 Control Bytes:

	Content								Hex Value
	Bit 7	Bit 6	Bit 5	Bit 4	Bit 3	Bit 2	Bit 1	Bit 0	Xx
ce ole rol	Force Auto Config/ Re-learn Enable 1 = Enable 0 = N/A	Steering angle Offset Learn 1 = Enable 0 = N/A	Long. Acc. Offset Learn 1 = Enable 0 = N/A	Reset TIMS Enable 1 = Enable 0 = N/A	Pressure Sensor Calibration 1 = Enable 0 = N/A	Pump Prime Sequence 1 = Enable 0 = N/A	Requested Torque Enable Yes = 1 No = 0	VES Control Enable Yes = 1 No = 0	
	Bit 7	Bit 6	Bit 5	Bit 4	Bit 3	Bit 2	Bit 1	Bit 0	Xx
ce e rol	Force Auto Config/ Re-learn 1 = Relearn 0 = N/A	Steering angle Offset Learn 1 = Learn 0 = N/A	Long. Acc. Offset Learn 1 = Learn 0 = N/A	Reset TIMS 1 = Reset 0 = N/A	Pressure Sensor Calibration 1 = Start 0 = N/A	Pump Prime Sequence 1 = Start 0 = N/A	Reserved	Reserv ed	
	Bit 7	Bit 6	Bit 5	Bit 4	Bit 3	Bit 2	Bit 1	Bit 0	Xx
ce ole e rol	EVAC Sequence Control Enable 1 = Enable 0 = N/A	EVAC Sequence 1 = Start 0 = N/A	FILL Sequence Control Enable 1 = Enable 0 = N/A	FILL Sequence 1 = Start 0 = N/A	Bi-State Mounts Control Enable 1 = Enable 0 = N/A	Bi-State Mounts On/Off 1 = On 0 = Off	Vacuum Pump Control Enable 1 = Enable 0 = N/A	Vacuu m Pump On/Off 1 = On 0 = Off	
ce rol	VES 0 - 255 = 0 - 100 % Duty Cycle $00= 0% D.C., $FF = 100% D.C., 0.392% D.C./ Count								Xx
ce rol	Requested Torque 0 - 255 = 0 - 100 % $00= 0%, $FF = 100%, 0.392% / Count								Xx

4.2.9.5.3 Device Control Limit Exceeded Conditions:

4.2.9.5.3.1 *Steering angle Offset Learn:*

Return Code	Device Control Limit Exceeded Description	Active for Service	Active for DVT
$5001	Wheel Speed Threshold of 3km/h Exceeded	*Y*	*N*
$5003	Voltage Out Of Range [9V – 16V]	*Y*	*Y*
$5005	System Currently Active	*Y*	*Y*

© This document is the exclusive property of Robert Bosch GmbH. Without their consent it may not be reproduced or given to third parties.
If printed this is a uncontrolled document. The user must verify it is an authorized edition prior to use.

4.2.9.5.3.2 *Longitudinal Acceleration Offset Learn*

Return Code	Device Control Limit Exceeded Description	Active for Service	Active for DVT
$5001	Wheel Speed Threshold of 3km/h Exceeded	*Y*	*N*
$5003	Voltage Out Of Range [9V – 16V]	*Y*	*Y*
$5005	System Currently Active	*Y*	*Y*

4.2.9.5.3.3 *Pump Prime Sequence:*

Return Code	Device Control Limit Exceeded Description	Active for Service	Active for DVT
$5001	Wheel Speed Threshold of 3km/h Exceeded	*Y*	*N*
$5002	Maximum Valve Or Pump Control Timer Exceeded	*Y*	*Y*
$5003	Voltage Out Of Range [9V – 16V]	*Y*	*Y*
$5004	Valve Or Pump Fault Detected	*Y*	*Y*
$5005	System Currently Active	*Y*	*Y*
$1107	Brake Pedal Not Applied During Pump Prime Sequence	*Y*	*Y*

4.2.9.5.3.4 *Vacuum Pump Control:*

Return Code	Device Control Limit Exceeded Description	Active for Service	Active for DVT
$5001	Wheel Speed Threshold of 3km/h Exceeded	*Y*	*N*
$5002	Maximum Valve Or Pump Control Timer Exceeded	*Y*	*Y*
$5003	Voltage Out Of Range [9V – 16V]	*Y*	*Y*
$5004	Valve Or Pump Fault Detected	*Y*	*Y*
$5005	System Currently Active	*Y*	*Y*

4.2.9.5.3.5 Semi - Autocycling

Return Code	Device Control Limit Exceeded Description	Active for Service	Active for DVT
$5001	Wheel Speed Threshold of 3km/h Exceeded	*Y*	*N*
$5002	Maximum Valve Or Pump Control Timer Exceeded	*Y*	*Y*
$5003	Voltage Out Of Range [9V – 16V]	*Y*	*Y*
$5004	Valve Or Pump Fault Detected	*Y*	*Y*
$5005	System Currently Active	*Y*	*Y*

© This document is the exclusive property of Robert Bosch GmbH. Without their consent it may not be reproduced or given to third parties.
If printed this is a uncontrolled document. The user must verify it is an authorized edition prior to use.

4.2.9.6 CPID $03:Pump Prime Sequence Timer Override

4.2.9.6.1 Overview:

This CPID is used to override timers used for the Pump Priming sequences.
Default timer values are already present in the eeprom for optimal routines.

If needed this CPID can be sent prior to starting Pump Prime Sequences to adjust the timers as needed. The new values will stay in effect until the CPID is sent again, a request to return to normal mode (service $20), or the ignition is cycled.

4.2.9.6.2 *Control Bytes:*

Byte	Content	Hex Value
1 Time Control	Start/End Delay Timer Override 0 = 0 mSec 255 = 2550 mSec N = E / 10	Xx
2 Time Control	Separation Timer 1 Over ride 0 = 0 mSec 255 = 2550 mSec N = E / 10	Xx
3 Time Control	Separation Timer 2 Over ride 0 = 0 mSec 255 = 2550 mSec N = E / 10	Xx
4 Time Control	Separation Timer 3 Over ride 0 = 0 mSec 255 = 2550 mSec N = E / 10	Xx
5 Time Control	Separation Timer 4 Over ride 0 = 0 mSec 255 = 2550 mSec N = E / 10	Xx

4.2.9.6.3 *Device Control Limit Exceeded Conditions:*

None

4.2.9.7 CPID $04: Valve Multi-State Control

4.2.9.7.1 Overview

This CPID allows a tester to control the ABS and TCS valves for verifying system functionality.

© This document is the exclusive property of Robert Bosch GmbH. Without their consent it may not be reproduced or given to third parties.
If printed this is a uncontrolled document. The user must verify it is an authorized edition prior to use.

Initial State is the state that the valves switch to upon receiving the message. After the Inter State Time has expired, the valve states transition to the Next State and stay in this state till CPID containing Valve Multi-State Control or ABS/TCS Valve Controls is received.
The controller shall respond with a response pending ($78) message until the second state of the valve is successfully entered. Only after the completion of the whole command shall the controller send a positive response.

4.2.9.7.2 Control Bytes

ABS:

Byte	Content								Hex Value
1 Device Enable And State Control	Bit 7	Bit 6	Bit 5	Bit 4	Bit 3	Bit 2	Bit 1	Bit 0	Xx
	Reserved	Reserved	Pump Motor Control State On = 1 Off = 0	Reserved	Reserved	Reserved	Pump Motor Control Enable Yes = 1 No = 0	ABS/TCS Valve Control Enable Yes = 1 No = 0	
2 ABS Device State Control	Bit 7	Bit 6	Bit 5	Bit 4	Bit 3	Bit 2	Bit 1	Bit 0	Xx
	RR Release Valve On = 1 Off = 0	RR Apply Valve On = 1 Off = 0	LR Release Valve On = 1 Off = 0	LR Apply Valve On = 1 Off = 0	RF Release Valve On = 1 Off = 0	RF Apply Valve On = 1 Off = 0	LF Release Valve On = 1 Off = 0	LF Apply Valve On = 1 Off = 0	
3 Inter State Time	Inter State Time E=10*N (mSec)								Xx
4 ABS Device Next State Control	Bit 7	Bit 6	Bit 5	Bit 4	Bit 3	Bit 2	Bit 1	Bit 0	Xx
	RR Release Valve Next State On = 1 Off = 0	RR Apply Valve Next State On = 1 Off = 0	LR Release Valve Next State On = 1 Off = 0	LR Apply Valve Next State On = 1 Off = 0	RF Release Valve Next State On = 1 Off = 0	RF Apply Valve Next State On = 1 Off = 0	LF Release Valve Next State On = 1 Off = 0	LF Apply Valve Next State On = 1 Off = 0	
5 TCS Device Enable And State Control	Bit 7	Bit 6	Bit 5	Bit 4	Bit 3	Bit 2	Bit 1	Bit 0	Xx
	Reserved	Reserved	Reserved	Reserved	Reserved	Reserved	Reserved	Reserved	

© This document is the exclusive property of Robert Bosch GmbH. Without their consent it may not be reproduced or given to third parties.
If printed this is a uncontrolled document. The user must verify it is an authorized edition prior to use.

4.2.9.7.3 Device Control Limit Exceeded Conditions:

4.2.9.7.3.1 *Valve Multi-State Control:*

Return Code	Device Control Limit Exceeded Description	Active for Service	Active for DVT
$5001	Wheel Speed Threshold of 3km/h Exceeded	*Y*	*N*
$5002	Maximum Valve Or Pump Control Timer Exceeded	*Y*	*Y*
$5003	Voltage Out Of Range [9V – 16V]	*Y*	*Y*
$5004	Valve Or Pump Fault Detected	*Y*	*Y*
$5005	System Currently Active	*Y*	*Y*

4.2.9.7.3.2 *Pump Motor Control:*

Return Code	Device Control Limit Exceeded Description	Active for Service	Active for DVT
$5001	Wheel Speed Threshold of 3km/h Exceeded	*Y*	*N*
$5002	Maximum Valve Or Pump Control Timer Exceeded	*Y*	*Y*
$5003	Voltage Out Of Range [9V – 16V]	*Y*	*Y*
$5004	Valve Or Pump Fault Detected	*Y*	*Y*
$5005	System Currently Active	*Y*	*Y*

4.2.9.8 CPID $0A:Evac and Fill Sequence Timer Override

4.2.9.8.1 Overview:

This CPID is used to override timers used for the Evac and Fill priming sequences.
Default timer values are already present in the eeprom for optimal routines.

If needed this CPID can be sent prior to starting Evac and Fill Sequences to adjust the timers as needed. The new values will stay in effect until the CPID is sent again, a request to return to normal mode (service $20), or the ignition is cycled.

© This document is the exclusive property of Robert Bosch GmbH. Without their consent it may not be reproduced or given to third parties.
If printed this is a uncontrolled document. The user must verify it is an authorized edition prior to use.

4.2.9.8.2 *Control Bytes:*

Byte	Content	Hex Value
1 Time Control	Start/End Delay Timer Override 0 = 0 mSec 255 = 255 Sec N = E	Xx
2 Time Control	Separation Timer 1 Override 0 = 0 mSec 255 = 255 Sec N = E	Xx
3 Time Control	Separation Timer 2 Override 0 = 0 mSec 255 = 255 Sec N = E	Xx
4 Time Control	N/A	Xx
5 Time Control	N/A	Xx

4.2.9.8.3 *Restrictions*

The separation time override needs to be set to at least 2 seconds to be considered by the software.

4.2.9.8.4 *Device Control Limit Exceeded Conditions:*

None

4.2.9.9 CPID $12: Repair Bleed Routine

4.2.9.9.1 Overview:

This CPID allows a tester to bleed each circuit in the Hydraulic Unit.

© This document is the exclusive property of Robert Bosch GmbH. Without their consent it may not be reproduced or given to third parties.
If printed this is a uncontrolled document. The user must verify it is an authorized edition prior to use.

4.2.9.9.2 Control Bytes:

Byte	Content	Hex Value
1 RepairBleed phase Identifier	RepairBleed phase Identifier RepairBleeding phase 1 RepairBleeding phase 2 RepairBleeding phase 3 RepairBleeding phase 4	 01H 02H 03H 04H
2 Start / Stop	Start (FFH) / Stop (00H)	XXH
3	Reserved	00H
4 Number of repetition	Number of repetition RepairBleeding phase 1 RepairBleeding phase 2 RepairBleeding phase 3 RepairBleeding phase 4	 XXH XXH 03H...05H 03H...05H

4.2.9.9.3 Device Control Limit Exceeded Conditions:

Return Code	Device Control Limit Exceeded Description	Active for Service	Active for DVT
$5001	Wheel Speed Threshold of 3km/h Exceeded	*Y*	*N*
$5002	Maximum Valve Or Pump Control Timer Exceeded	*Y*	*Y*
$5003	Voltage Out Of Range [9V – 16V]	*Y*	*Y*
$5004	Valve Or Pump Fault Detected	*Y*	*Y*
$5005	System Currently Active	*Y*	*Y*

4.2.9.10 CPID $14: Static Test

4.2.9.10.1 Overview:

The Static Test is a routine that gives the possibility to start checks of the electric & hydraulic actuation infrastructure, which normally are automatically triggered during normal system operation.
All available internal hydraulic electrical tests shall be triggered in this routine.
During the routine, there shall be no inadvertent application of the brakes. No mechanical applications shall occur.

4.2.9.10.2 Control Bytes:

None

© This document is the exclusive property of Robert Bosch GmbH. Without their consent it may not be reproduced or given to third parties.
If printed this is a uncontrolled document. The user must verify it is an authorized edition prior to use.

4.2.9.10.3 Device Control Limit Exceeded Conditions:

Return Code	Device Control Limit Exceeded Description	Active for Service	Active for DVT
$5001	Wheel Speed Threshold of 3km/h Exceeded	*Y*	*N*
$5002	Maximum Valve Or Pump Control Timer Exceeded	*Y*	*Y*
$5003	Voltage Out Of Range [9V – 16V]	*Y*	*Y*
$5005	System Currently Active	*Y*	*Y*

4.2.9.11 CPID $15: Lamp Activation

4.2.9.11.1 Overview:

This CPID allows a tester to activate the Malfunction Indicator Lamps via the EBCM.

4.2.9.11.2 Control Bytes:

Byte	Content								Hex Value
1 Lamp Enable	Bit 7	Bit 6	Bit 5	Bit 4	Bit 3	Bit 2	Bit 1	Bit 0	Xx
					VSES Lamp Control Enable Yes = 1 No = 0	TCS Lamp Control Enable Yes = 1 No = 0	DRP Lamp Control Enable Yes = 1 No = 0	ABS Lamp Control Enable Yes = 1 No = 0	
2	Reserved								Xx
3 Lamp Control	Bit 7	Bit 6	Bit 5	Bit 4	Bit 3	Bit 2	Bit 1	Bit 0	Xx
					VSES Lamp On = 1 Off = 0	TCS Lamp On = 1 Off = 0	DRP Lamp On = 1 Off = 0	ABS Lamp On = 1 Off = 0	
4	Reserved								Xx

4.2.9.11.3 Device Limits Exceeded Conditions:

Return Code	Device Control Limit Exceeded Description	Active for Service	Active for DVT
$5001	Wheel Speed Threshold of 3km/h Exceeded	*Y*	*N*
$5003	Voltage Out Of Range [9V – 16V]	*Y*	*Y*
$5005	System Currently Active	*Y*	*Y*

© This document is the exclusive property of Robert Bosch GmbH. Without their consent it may not be reproduced or given to third parties.
If printed this is a uncontrolled document. The user must verify it is an authorized edition prior to use.

4.2.9.12 CPID $17: Dynamic Test

4.2.9.12.1 Overview:

This CPID allows a tester to activate dedicated actuators (e. g. inlet valve or pump motor) and perform an additional sampling of all 4 wheel speeds. It is possible to set 4 actuators, an actuation time and a waiting time for one routine run. The ECU stores the wheel speeds, switches two actuators, waits the defined actuation time, switches again two actuators, waits the waiting time and stores again the current speed of the wheels.

The results are calculated as ΔV = V2 - V1 and are responded with the ECU response.

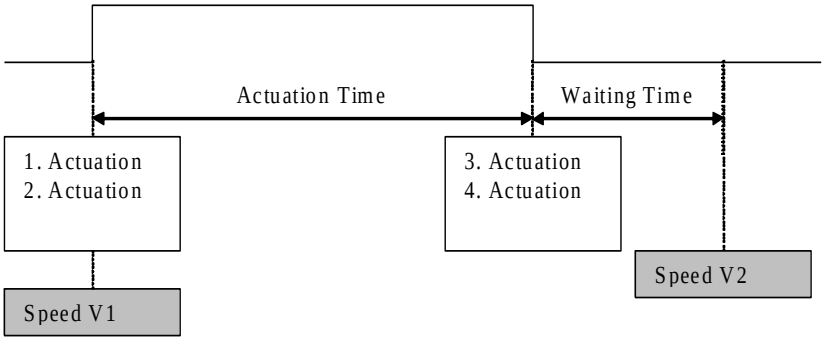

The Dynamic Test is split in two requests because of the limitation of 5 data bytes per request. For a successful activation a first request with the actuation sequence number 01H (Multi request 1) must be followed by a second request with the actuation sequence number 02H (Multi request 2). After the ECU received the second request, the Dynamic Test will be launched.

A simplified version of the Dynamic Test can be started by sending a single request with the actuation sequence 03H (Single Request).

It is possible to deactivate certain DTCs that would fail due to the DVT interaction. The deactivation is done using service $27 security access with subfunction $03/04 (=enter DVT mode).

By default all the DTCs are disabled when the device control is entered (service $AE). If only specific DTCs have to remain active during DVT the customer should first enable the DTCs during device control (service $10 03) and enter the DVT mode (service $27 03/04) **BEFORE** entering the device control. It does not matter if the DVT mode is entered first or if the DTCs are first enabled.

© This document is the exclusive property of Robert Bosch GmbH. Without their consent it may not be reproduced or given to third parties.
If printed this is a uncontrolled document. The user must verify it is an authorized edition prior to use.

4.2.9.12.2 Control Bytes:

4.2.9.12.2.1 Multi Request 1

Byte	Content								Hex Value
1	Actuation sequence Multi request 1								01
2 ABS State Control	Bit 7	Bit 6	Bit 5	Bit 4	Bit 3	Bit 2	Bit 1	Bit 0	Xx
	RR Release Valve On=1 Off=0	RR Apply Valve On=1 Off=0	RL Release Valve On=1 Off=0	RL Apply Valve On=1 Off=0	FR Release Valve On=1 Off=0	FR Apply Valve On=1 Off=0	FL Release Valve On=1 Off=0	FL Apply Valve On=1 Off=0	
3 TCS / VSES / Pump Motor Control	Bit 7	Bit 6	Bit 5	Bit 4	Bit 3	Bit 2	Bit 1	Bit 0	Xx
	Primary Prime Valve On=1 Off=0	Secondary Prime Valve On=1 Off=0	Primary Isolation Valve On=1 Off=0	Secondary Isolation Valve On=1 Off=0	Reserved	Reserved	Reserved	Pump Motor On=1 Off=0	
4	Actuation Time HB Resolution: 1bit = 10ms								Xx
5	Actuation Time LB Resolution: 1bit = 10ms								Xx

4.2.9.12.2.2 Multi Request 2

Byte	Content								Hex Value
1	Actuation sequence Multi request 2								02
2 ABS Next State Control	Bit 7	Bit 6	Bit 5	Bit 4	Bit 3	Bit 2	Bit 1	Bit 0	Xx
	RR Release Valve On=1 Off=0	RR Apply Valve On=1 Off=0	RL Release Valve On=1 Off=0	RL Apply Valve On=1 Off=0	FR Release Valve On=1 Off=0	FR Apply Valve On=1 Off=0	FL Release Valve On=1 Off=0	FL Apply Valve On=1 Off=0	
3 TCS / VSES / Pump Motor Next State Control	Bit 7	Bit 6	Bit 5	Bit 4	Bit 3	Bit 2	Bit 1	Bit 0	Xx
	Primary Prime Valve On=1 Off=0	Secondary Prime Valve On=1 Off=0	Primary Isolation Valve On=1 Off=0	Secondary Isolation Valve On=1 Off=0	Reserved	Reserved	Reserved	Pump Motor On=1 Off=0	
4	Wait Time HB Resolution: 1bit = 10ms								Xx

© This document is the exclusive property of Robert Bosch GmbH. Without their consent it may not be reproduced or given to third parties.
If printed this is a uncontrolled document. The user must verify it is an authorized edition prior to use.

5	Wait Time LB Resolution: 1bit = 10ms	Xx

4.2.9.12.2.3 Single Request

Byte	Content								Hex Value
1	Actuation sequence Single request								03
2 ABS Control State	Bit 7	Bit 6	Bit 5	Bit 4	Bit 3	Bit 2	Bit 1	Bit 0	Xx
	RR Release Valve On=1 Off=0	RR Apply Valve On=1 Off=0	RL Release Valve On=1 Off=0	RL Apply Valve On=1 Off=0	FR Release Valve On=1 Off=0	FR Apply Valve On=1 Off=0	FL Release Valve On=1 Off=0	FL Apply Valve On=1 Off=0	
3 TCS / VSES / Pump Motor Control State	Bit 7	Bit 6	Bit 5	Bit 4	Bit 3	Bit 2	Bit 1	Bit 0	Xx
	Primary Prime Valve On=1 Off=0	Secondary Prime Valve On=1 Off=0	Primary Isolation Valve On=1 Off=0	Secondary Isolation Valve On=1 Off=0	Reserved	Reserved	Reserved	Pump Motor On=1 Off=0	
4	Wait Time HB Resolution: 1bit = 10ms								Xx
5	Wait Time LB Resolution: 1bit = 10ms								Xx

4.2.9.12.3 Device Limit Exceeded Conditions:

Return Code	Device Control Limit Exceeded Description	Active for Service	Active for DVT
$5001	Wheel Speed Threshold of 3km/h Exceeded	Y	N
$5002	Maximum Valve Or Pump Control Timer Exceeded	Y	Y
$5003	Voltage Out Of Range [9V – 16V]	Y	Y
$5004	Valve Or Pump Fault Detected	Y	Y
$5005	System Currently Active	Y	Y

4.2.9.13 CPID $FD: System Basic Functions

4.2.9.13.1 Overview:

A request for CPID $FD will be rejected if the vehicle speed is greater than 0,5km/h.

4.2.9.13.1.1 Disable All System Outputs:

This device control allows a tester to deactivate all output devices of the EBCM simultaneously (inlet valves, outlet valves, isolation valves, prime valves, return pump, electrical vacuum pump)

© This document is the exclusive property of Robert Bosch GmbH. Without their consent it may not be reproduced or given to third parties.
If printed this is a uncontrolled document. The user must verify it is an authorized edition prior to use.

When this device control is active, all device controls assigned in other CPIDs for that ECU can be activated/deactivated independently by the other CPID (overrides CPID $FD for that output).

4.2.9.13.1.2 *ECU Reset:*

This device control allows a tester to force the ECU to restart the application program (soft reset). Previously learned configuration data, adaptive factors, and other long-term adjustments shall not be reinitialized.
The ECU must respond to the request prior to performing the reset.

4.2.9.13.2 Control Bytes:

Byte	Content								Hex Value
0	Bit 7	Bit 6	Bit 5	Bit 4	Bit 3	Bit 2	Bit 1	Bit 0	Xx
	Disable All System Outputs Enable=1 Disable=0	ECU Reset Enable=1 Disable=0	Reserved	Reserved	Reserved	Reserved	Reserved	Reserved	
1	Reserved	Reserved	Reserved	Reserved	Reserved	Reserved	Reserved	Reserved	Xx
2	Reserved	Reserved	Reserved	Reserved	Reserved	Reserved	Reserved	Reserved	Xx
3	Reserved	Reserved	Reserved	Reserved	Reserved	Reserved	Reserved	Reserved	Xx
4	Reserved	Reserved	Reserved	Reserved	Reserved	Reserved	Reserved	Reserved	Xx

4.2.9.13.3 Device Control Limit Exceeded Conditions:

4.2.9.13.3.1 *Disable All System Outputs:*

Return Code	Device Control Limit Exceeded Description	Active for Service	Active for DVT
$0401	Vehicle Speed Not Zero	*Y*	*Y*
$0201	Engine Speed Not Zero	*Y*	*Y*

4.2.9.13.3.2 *ECU Reset:*

Return Code	Device Control Limit Exceeded Description	Active for Service	Active for DVT
$0401	Vehicle Speed Not Zero	*Y*	*Y*
$0201	Engine Speed Not Zero	*Y*	*Y*

© This document is the exclusive property of Robert Bosch GmbH. Without their consent it may not be reproduced or given to third parties.
If printed this is a uncontrolled document. The user must verify it is an authorized edition prior to use.

4.3 Application: Speed Limit

TBD – List all the Services that have a speed limitation.
Also mention possibilities of monitoring depending on vehicle speed.

- Disable normal communication?
- Initiate Diagnostic operation?
- CPIDs? + relation to security access DevCtrl (assembly plant mode)
- 0 kph for CPID $FD (0,5 kph implemented)

Following services are restricted by a speed limitation:

4.3.1 Service $AE Device Control

4.3.1.1 CPID $FD

A request for CPID $FD will be rejected if the vehicle speed is greater than 0,5km/h.
The speed monitoring remains active as long as this CPID is being executed.
This speed monitoring will be deactivated if the DVT mode has been entered using service $27 with subfunction $03/$04.

4.4 Application: Fault Memory (SubFNID 224)

4.4.1 Diagnostic Trouble Codes

4.4.1.1 DTCs Set as a Result of Unprogrammed or Unlearned Information

Following DTCs will only become current (bit 1 = 1) when the MEC is equal to $00:
- B101E:47 (0x901E47) VIN_NotProgrammed
- B101E:48 (0x901E48) SecurityData_NotProgrammed
- B3984:00 (0xB98400) Device1_IdentifierNotProgrammed
- C0558:46 (0x455846) CAL_VehicleConfig_NotProgrammed
- C0558:5A (0x45585A) CAL_VarCode_NotPlausible

Following DTCs are considered as defined for system configuration. The history DTC bit (bit 4) will always remain 0:
- B101E:47 (0x901E47) VIN_NotProgrammed
- B3984:00 (0xB98400) Device1_IdentifierNotProgrammed
- C0558:42 (0x455842) CAL_VarCode_NotReleased
- C0558:46 (0x455846) CAL_VehicleConfig_NotProgrammed
- C0558:5A (0x45585A) CAL_VarCode_NotPlausible

See Diagnostic Data List (DDL) for more information about the DTCs.

4.4.1.2 Visual Indication

If a dedicated telltale is available for a specific Control Module then the telltale shall be illuminated when the DTC is set for programming/learn/setup procedure is required but not yet performed and the MEC is zero.

4.4.1.3 DTCs Executing After MEC Clear

All Diagnostic Trouble Codes that are disabled by the MEC being non-zero must run and complete within 2 seconds after the MEC is cleared.

© This document is the exclusive property of Robert Bosch GmbH. Without their consent it may not be reproduced or given to third parties.
If printed this is a uncontrolled document. The user must verify it is an authorized edition prior to use.

4.4.1.4 Condition Latched / Ignition Latched DTCs

DTCs are divided in 2 types:

- Condition Latched DTC (= non-latching DTCs)
This DTCs will become current as soon as the diagnostic test related to the DTC has failed (= bit 1 set to 1 and bit 4 set to 1)
When the failed conditions disappear this DTC is deactivated but remains in history (= bit 1 set to 0 and bit 4 remains 1)
These DTCs are considered as 'Curable' in the Diagnostic Data list

Influence of ignition cycle:
Current DTC bit (=bit 1) remains to the same value as before the ignition cycle
- Ignition Latched DTC (= limited duration latching DTCs)
This DTCs will become current as soon as the diagnostic test related to the DTC has failed (= bit 1 set to 1 and bit 4 set to 1)
When the failed conditions disappear this DTC remains set.
By the start of the next ignition cycle this DTC will be deactivated but remains in history (= bit 1 set to and bit 4 remains 1)

DTCs for which the diagnostic test is only run once per ignition cycle are considered as ignition latched DTCs
These DTCs are considered as 'Non-Curable' in the Diagnostic Data List
Influence of ignition cycle:
Current DTC bit (=bit 1) is set back to 0

4.4.1.5 DTC Status Byte

4.4.1.5.1 Bit 0: DTC Supported by Calibration

This Bit indicates that the DTC has been activated with the calibration file.
A value of 0 indicates that the DTC is not supported
Influence of Code Clear (Service $04):
No influence
Influence of ignition cycle:
No influence

4.4.1.5.2 Bit 1: Current DTC

This bit indicates that the DTC is currently set.
A DTC is set when the diagnostic test has failed.
A DTC will remain set as long as the failed condition exist.
When the failed condition no longer exist the DTC will be deactivated straight away (condition latched DTCs) or at the start of the next ignition cycle (ignition latched DTCs).
When a DTC becomes current the HistoryDTC Bit (= bit 4) is also set to 1.
Influence of Code Clear (Service $04):
Bit is set to 0
Influence of ignition cycle:
No influence (condition latched DTC)
Bit is set to 0 (ignition latched DTC)

4.4.1.5.3 Bit 2: Test not passed since DTC cleared

This bit indicates if the diagnostic test of a given DTC has passed since the last successful Code Clear (Service $04)
If the test has passed the bit will be set to 0.
If the test has run but failed the bit will remain to 1.

© This document is the exclusive property of Robert Bosch GmbH. Without their consent it may not be reproduced or given to third parties.
If printed this is a uncontrolled document. The user must verify it is an authorized edition prior to use.

If the test has not run the bit will remain to 1.
Influence of Code Clear (Service $04):
Bit is set to 1
Influence of ignition cycle:
No influence

4.4.1.5.4 Bit 3: Test failed since DTC cleared

This bit indicates if the diagnostic test of a given DTC has failed since the last successful Code Clear (Service $04)
Influence of Code Clear (Service $04):
Bit is set to 0
Influence of ignition cycle:
No influence

4.4.1.5.5 Bit 4: History DTC

This bit is set to 1 when a DTC becomes current
This bit is set to 1 when the warning indicator request state (=bit 7) is set to 1
This bit is stored in long term memory.
This bit should always remain 0 for DTCs defined for system configuration. (see chapter about TBD "DTCs set as a result of unprogrammed or unlearned information" for list of DTCs affected by this requirement)
Influence of Code Clear (Service $04):
Bit is set to 0
Influence of ignition cycle:
No influence

4.4.1.5.6 Bit 5: Test not passed since current power up

This bit indicates if the diagnostic test of a given DTC has passed since the last ignition cycle.
If the test has passed the bit will be set to 0.
If the test has run but failed the bit will remain to 1.
If the test has not run the bit will remain to 1.
Influence of Code Clear (Service $04):
Bit is set to 1
Influence of ignition cycle:
Bit is set to 1

4.4.1.5.7 Bit 6: Current DTC since current power up

This bit indicates if the DTC has been set to current during the current ignition cycle
Influence of Code Clear (Service $04):
Bit is set to 0
Influence of ignition cycle:
Bit is set to 0

4.4.1.5.8 Bit 7: warning Indicator requested state

This bit indicates that the lamp for a given DTC is currently on.
This bit remains set as long as the DTC is current.
If no lamp is related to a given DTC then this bit should always remain to 0.
When this bit is set to 1 the History DTC bit (=bit 4) is set to 1.
Influence of Code Clear (Service $04):
Bit is set to 0
Influence of ignition cycle:
No influence (condition latched DTC)
Bit is set to 0 (ignition latched DTC)

© This document is the exclusive property of Robert Bosch GmbH. Without their consent it may not be reproduced or given to third parties.
If printed this is a uncontrolled document. The user must verify it is an authorized edition prior to use.

4.4.1.6 Automatic clearing of DTCs

After 40 consecutives fault free ignition cycles the DTC Status and Failure Type information shall be cleared (the transition of the system power mode from OFF to RUN to OFF is considered as an ignition cycle).
A Fault Free Ignition Cycle Counter shall be used to track the automatic clearing of the DTC information.

This counter shall only be decremented if no failure has been set during the current ignition cycle.

This counter shall be independent from the Common-Enable Line.
In case of battery interruption while in SysPwrMd = RUN the counter will be updated at the next ignition cycle.
Each time a failure is set the counter shall be reset.

When the counter reaches 0 the ECU shall execute same logic as when a request for Service $04 Clear Diagnostic Information is received except a positive response shall not be generated.

4.4.1.7 Diagnostic Data List

4.4.1.7.1 Information present in the Diagnostic Data List

This section should list all the information that can be found in the Diagnostic Data list
DTC Failure Criteria
TestPass Criteria
HistoryDTC Decision Criteria

4.4.1.7.2 DTC List

Customer Code	Symptom	DTC Name
U0422	0x4B	BCM_Calibration_GM
U0422	0x72	BCM_InvalidDataReceivedCounter_GM
U0422	0x77	BCM_InvalidDataReceivedDLC_GM
U0422	0x71	BCM_InvalidSignal_GM
C0126	0x12	BFL_Below
C0126	0x05	BFL_Short
C0161	0x5A	BLS_Plaus
C0299	0x00	BoosterLeakDetected
C0558	0x5A	CAL_VarCode_NotPlausible
C0558	0x42	CAL_VarCode_NotReleased
C0558	0x46	CAL_VehicleConfig_NotProgrammed
U0140	0x00	CAN_LostCommToBCM_GM
U0100	0x00	CAN_LostCommToECM_GM
B3984	0x00	Device1_IdentifierNotProgrammed
U0401	0x77	ECM_InvalidDataReceivedDLC_GM
U0401	0x71	ECM_InvalidSignal_GM
C056D	0x3C	ECU_HW_Comms
C056D	0x36	ECU_HW_EEPROM
C056D	0x39	ECU_HW_Internal
C056D	0x34	ECU_HW_RAM
C056D	0x32	ECU_HW_Read
C056D	0x3B	ECU_HW_Selftest
C056D	0x39	ECU_HW_Watchdog

© This document is the exclusive property of Robert Bosch GmbH. Without their consent it may not be reproduced or given to third parties.
If printed this is a uncontrolled document. The user must verify it is an authorized edition prior to use.

C056E	0x43	ECU_SW_EEPROM
C056E	0x4D	ECU_SW_Stack
C0800	0x12	ECU_Voltage_Minimum
C0800	0x0D	ECU_Voltage_Resistance
C027B	0x05	EVP_Bat
C027B	0x06	EVP_Ground
U2099	0x03	HighSpeedCommunicationEnableCircuit_SignalInvalid_GM
B3902	0x00	Immobilizer_WrongIdentifier
U0073	0x00	NET_HS_Gen
U0073	0x59	NET_HS_Timeout
C0110	0x06	PumpMotorCircuit_OpenGND
C0116	0x00	PumpMotorRelayCircuit_ElectricalFailure
C0116	0x39	PumpMotorRelayCircuit_Internal
C0115	0x61	PumpMotor_Stuck
C0110	0x07	Pump_Above
C0110	0x03	Pump_Below
C0110	0x39	Pump_Internal
C0110	0x59	Pump_Timeout
B101E	0x48	SecurityData_NotProgrammed
U0402	0x77	TransmissionControl_DataLength
U0402	0x71	TransmissionControl_InvalidData
U0101	0x00	TransmissionControl_Timeout
C0914	0x00	U5V_Gen
C0914	0x02	U5V_Gnd
C0800	0x07	UZ_BatteryAbove16V_GM
C0800	0x03	UZ_BatteryBelow9V_GM
B101E	0x47	VIN_NotProgrammed
C0121	0x39	VRCircuit_Internal
C0121	0x0D	VRCircuit_ResistanceHigh
C0121	0x00	VR_Gen
C0121	0x02	VR_Gnd
C0121	0x3B	VR_Selftest
C0179	0x59	ValveOverHeatProtection
C003B	0x66	WSSCircuitsWrgMntgPos_GM
C0035	0x0F	WSS_FL_Erratic
C0035	0x00	WSS_FL_Gen
C0035	0x01	WSS_FL_LineShort
C0035	0x17	WSS_FL_Noise
C0035	0x5A	WSS_FL_Plaus
C0036	0x29	WSS_FL_Pulses
C0035	0x66	WSS_FL_Sensor_WrgMntgPos_GM
C0035	0x06	WSS_FL_Short
C0035	0x18	WSS_FL_Signal
C0036	0x08	WSS_FL_SignalInvalid
C0035	0x02	WSS_FL_SupplyGround
C0040	0x0F	WSS_FR_Erratic
C0040	0x00	WSS_FR_Gen
C0040	0x01	WSS_FR_LineShort
C0040	0x17	WSS_FR_Noise
C0040	0x5A	WSS_FR_Plaus
C0041	0x29	WSS_FR_Pulses
C0040	0x66	WSS_FR_Sensor_WrgMntgPos_GM

© This document is the exclusive property of Robert Bosch GmbH. Without their consent it may not be reproduced or given to third parties.
If printed this is a uncontrolled document. The user must verify it is an authorized edition prior to use.

C0040	0x06	WSS_FR_Short
C0040	0x18	WSS_FR_Signal
C0041	0x08	WSS_FR_SignalInvalid
C0040	0x02	WSS_FR_SupplyGround
C0245	0x59	WSS_GEN_ABS_ContControl
C0245	0x58	WSS_GEN_ABS_EmgBrake
C005A	0x04	WSS_GEN_Below
C005A	0x5A	WSS_GEN_Plaus
C005A	0x1B	WSS_GEN_Signal
C0045	0x0F	WSS_RL_Erratic
C0045	0x00	WSS_RL_Gen
C0045	0x01	WSS_RL_LineShort
C0045	0x17	WSS_RL_Noise
C0045	0x5A	WSS_RL_Plaus
C0046	0x29	WSS_RL_Pulses
C0045	0x66	WSS_RL_Sensor_WrgMntgPos_GM
C0045	0x06	WSS_RL_Short
C0045	0x18	WSS_RL_Signal
C0046	0x08	WSS_RL_SignalInvalid
C0045	0x02	WSS_RL_SupplyGround
C0050	0x0F	WSS_RR_Erratic
C0050	0x00	WSS_RR_Gen
C0050	0x01	WSS_RR_LineShort
C0050	0x17	WSS_RR_Noise
C0050	0x5A	WSS_RR_Plaus
C0051	0x29	WSS_RR_Pulses
C0050	0x66	WSS_RR_Sensor_WrgMntgPos_GM
C0050	0x06	WSS_RR_Short
C0050	0x18	WSS_RR_Signal
C0051	0x08	WSS_RR_SignalInvalid
C0050	0x02	WSS_RR_SupplyGround

© This document is the exclusive property of Robert Bosch GmbH. Without their consent it may not be reproduced or given to third parties.
If printed this is a uncontrolled document. The user must verify it is an authorized edition prior to use.

4.4.1.7.3 Conversion between SW code and Customer Code

Customer Code	SW Code (hexadecimal encoding)
P0	0
P1	1
P2	2
P3	3
C0	4
C1	5
C2	6
C3	7
B0	8
B1	9
B2	A
B3	B
U0	C
U1	D
U2	E
U3	F

© This document is the exclusive property of Robert Bosch GmbH. Without their consent it may not be reproduced or given to third parties.
If printed this is a uncontrolled document. The user must verify it is an authorized edition prior to use.